# RC10 SC6.2 TEAM KIT

1:10 Scale 2WD Electric Off Road
Competition Short Course Truck Kit


#70008 RC10SC6.2 TEAM KIT

## 1:10 Scale 2WD Electric Off Road Competition Short Course Truck Kit Manual & Catalog

WeAreAE CHAMPIONS by DESIGN AssociatedElectrics.com

TEAM ASSOCIATED

## :: Introduction

Thank you for purchasing this Team Associated product. This assembly manual contains instructions and tips for building and maintaining your new vehicle. Please take a moment to read through the manual and familiarize yourself with the steps. We are continually changing and improving our designs; therefore, actual parts may appear slightly different than the illustrations. New parts will be noted on supplementary sheets located in the appropriate parts bags.
Check each bag for these sheets before you start to build.

## :: RC10SC6.2 KIT Features

- Flat suspension arms and new rear carbon fiber shock tower with updated geometry
- B74.1 two-piece rear hub with aluminum upper caps for fine geometry adjustments
- 1.3mm front anti-roll bar and hardware included for added high-speed stability
- Lay Down & Lay Back Stealth ® transmission both included for tuning weight bias
- Factory Team 13g aluminum chassis weight
- Updated side rails for 30mm motor fan mount shared with B6.2 buggy
- Easy-access differential with height adjustment using included 0, 1, 2, and 3mm inserts
- +1 carbon fiber steering block arms
- Updated front bumper design for increased durability
- Aluminum C and D arm mounts included for large range of anti-squat and toe adjustments
- Aluminum rear ballstud mount for added strength
- Lightweight, hard-anodized aluminum chassis with centralized mass and three mid-motor positions for improved handling on all track types.
- Differential height adjustment with included 0, 1, 2, & 3mm inserts.
- Easy access to ball differential.
- New slipper assembly for better weight balance and shock clearance.
- Heavy-duty 4mm carbon fiber shock towers.
- Heavy-duty V2 rear axle with 91mm CVA bones.
- V2 12mm "Big Bore" threaded aluminum shocks with 3mm shafts and x-rings for improved smoothness.
- Machined pistons included for better fit and smoother operation.
- Reverse bell crank steering allows more room for mounting electronics.
- Bolt on steering block arms for easy Ackermann adjustments.
- Aluminum rear ball stud mount for added strength.
- One-piece shock bushing to make assembly easier.
- Lightweight aluminum top shaft.
- Innovative rear arm with molded inserts for ultra-fine lower shock mounting adjustments.
- Factory Team upgraded ball bearing kit included (now oiled instead of greased for less drag).
- Heavy-duty ball cups and ball studs allow for maximum suspension travel while reducing bind and friction.

## :: Additional

Your new SC6.2 Team Kit comes unassembled and requires the following items for completion (refer to catalog for suggestions):

- R/C two channel surface frequency radio system
- AA-size batteries for transmitter (#302 alkaline)
- Electronic Speed Control, ESC (#27002, 27003, 27004, 27005)
- Steering servo (#27113, 27114, 27116, 27100, 27101, 27107, 27109)
- R/C electric motor
- Pinion gear (48P), size determined by type/wind of motor
- Battery charger (a peak detection charger, or LiPo compatible charger)
- 2 cell LiPo battery pack (#27318, 27347, 27348, 27349, 27350)
- Polycarbonate specific spray paint
- Cyanoacrylate glue (CA)(#1597)
- Thread locking compound (#1596)
- Tires and Inserts, Fronts and Rears
- Wheels w/12mm Hex #71040, 91101

Tools included:

- Allen wrenches 1.5mm, 2.0mm
- #1113 12mm Shock Tool
- Multi-wrench

## :: Other Helpful Items

- Silicone Shock Fluid (Refer to catalog for complete listings)
- FT Body Scissors (#1737)
- FT Hex/Nut Wrenches (#1519)
- FT Universal Tire Balancer (#1498)
- FT Dual Turnbuckle Wrench (#1114)
- FT Body Reamer (#1499)
- Needle Nose Pliers
- Calipers or a Precision Ruler
- Green Slime shock lube (#1105)
- Shock Pliers (#1675)
- FT Ballcup Wrench (#1579)
- Soldering Iron
- Wire Cutters
- Hobby Knife

Associated Electrics, Inc.
21062 Bake Parkway.
Lake Forest, CA 92630

Customer Service
Tel: 949.544.7500
Fax: 949.544.7501

## :: Hardware - 1:1 Scale View

### Button Head (bhcs)

2x4mm (31510)
Aluminum (8545)

2.5x6mm (31520)

2.5x8mm (31521)

2.5x10mm (31522)

3x4mm (91158)

3x5mm (31530)

3x6mm (31531)
Aluminum (8550)
Titanium (91580)

3x8mm (31532)
Aluminum (8552)
Titanium (91581)

3x10mm (25211)
Aluminum (8554)
Titanium (91582)

3x12mm (89202)
Titanium (91583)

3x14mm (25187)
Titanium (91584)

3x16mm (89203)
Titanium (91585)

3x18mm (2308)

3x20mm (25188)
Titanium (91587)

3x22mm (25189)
Titanium (91588)

3x24mm (89204)
Titanium (91589)

3x30mm (91478)

### Cap Head (shcs)

1.6 x 5mm (91611)

### Flat Head (fhcs)

2x3mm (91743)

3x8mm (25201)
Aluminum (8553)
Titanium (91592)

3x10mm (25202)
Aluminum (8555)
Titanium (91593)

3x12mm (25203)
Aluminum (8556)
Titanium (91594)

3x14mm (89208)
Aluminum (8567)
Titanium (91595)

3x16mm (25204)
Titanium (91596)

3x18mm (89209)
Titanium (91597)

### Set Screws

3x2.5mm (31500)

3x3mm (25225)

3x10mm (4671)

### Shims and Washers

5.5x0.5mm (31381)

5.5x1.0mm (31382)

5.5x2.0mm (31383)

3x8mm Washer (89218)

### Diff Balls

5/64 Diff Thrust Balls (6574)

3/32 Carbide Diff Balls (6581)
3/32 Ceramic Diff Balls (6584)

### Ball Bearings

3x7x3mm (91475)

5x8x2.5mm (31400)

5x10x4mm (91560)

6x13x5 (91562)

10x15x4 (91563)

### Ballstuds

Silver 5mm long (31283)
Ti Nitride 5mm long (31291)

Silver 8mm long (31284)
Ti Nitride 8mm long (31292)

HD 6mm (91047)
Ti Nitride HD 6mm (91118)
Ti HD 6mm (91751)

HD 8mm (91048)
Ti Nitride HD 8mm (91119)
Ti HD 8mm (91752)

HD 10mm (91049)
Ti Nitride HD 10mm (91120)
Ti HD 10mm (91753)

### Nuts (lock/plain)

M3 Nut (91477)
M3 Alum. Locknut, Blue (31550)
M3 Locknut, Black (25215

M3 Locknut w/Flange (25612)
FT 3mm Locknuts, Blue(25392)

M4 Locknuts:
Serrated Steel LP (91150)
Serrated Steel (Silver) (91826)
FT Aluminum (Blue) (31551)
Serrated Aluminum (Black) (91738)

**Notes:**

## :: Table of Contents



## :: Notes

This symbol indicates a special note or instruction in the manual.

This symbol indicates a Racers Tip.

There is a 1:1 hardware foldout page in the front of the manual. To check the size of a part, line up your hardware with the correct drawing until you find the exact size. Each part in the foldout has a number assigned to it for ordering replacement parts.


Associated Electrics, Inc.
21062 Bake Parkway.
Lake Forest, CA 92630

Customer Service
Tel: 949.544.7500
Fax: 949.544.7501

## :: Bag 1 - Step 1

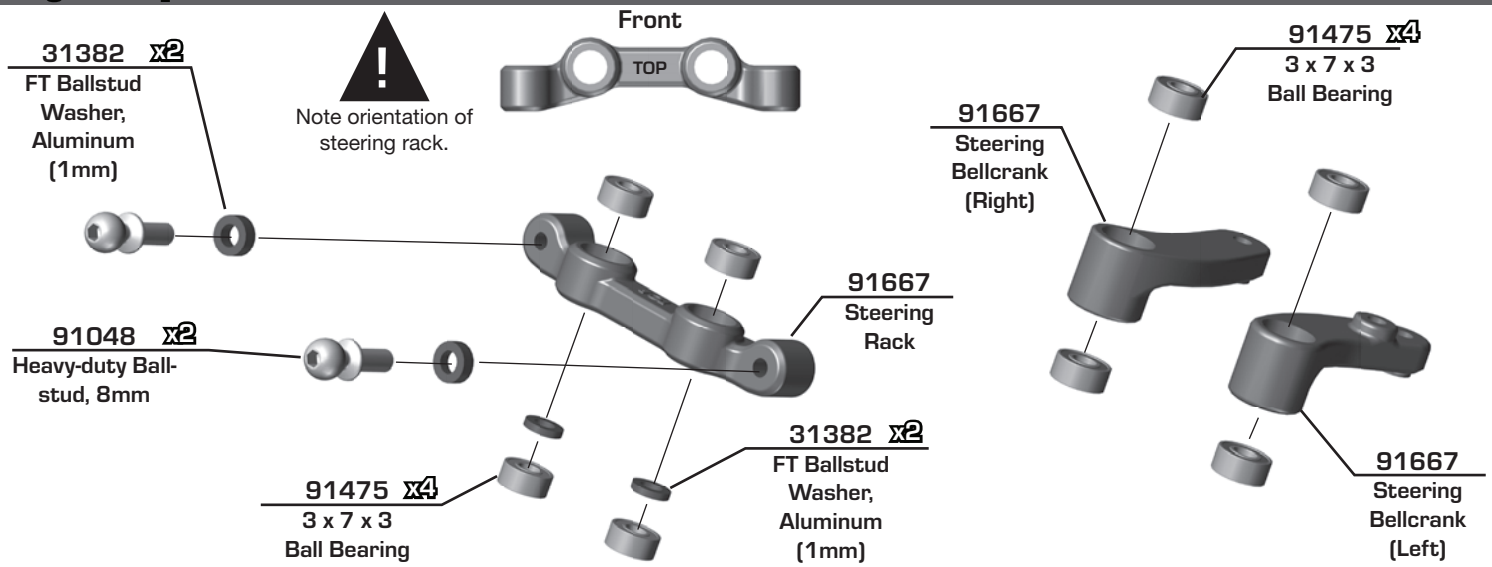


## :: Bag 1 - Step 2

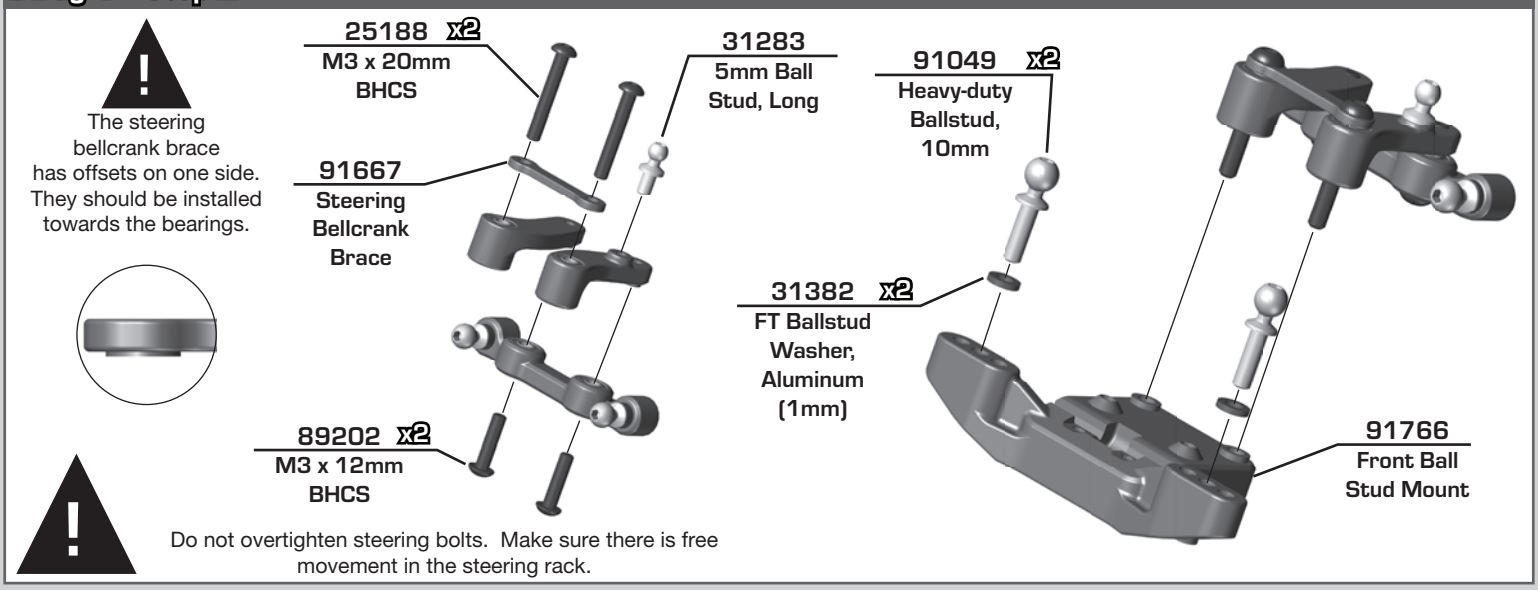


## :: Bag 2 - Step 1

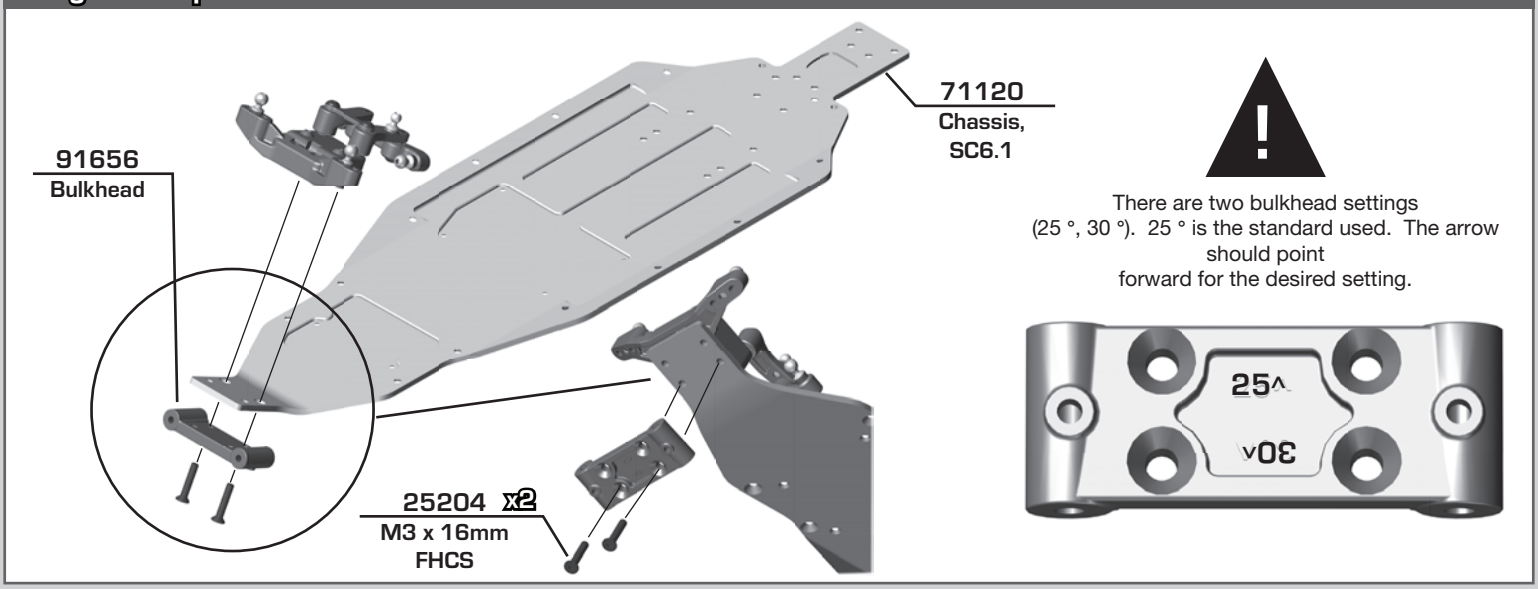

## :: Bag 2 - Step 2

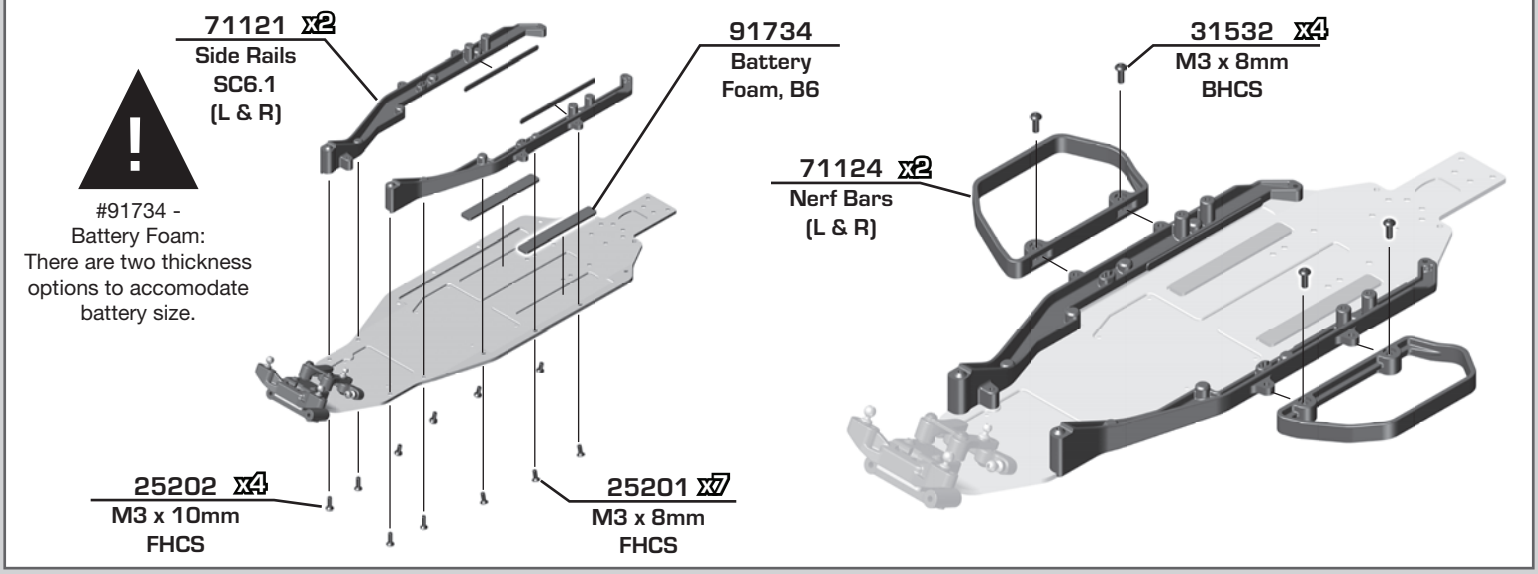


## :: Bag 2 - Step 3

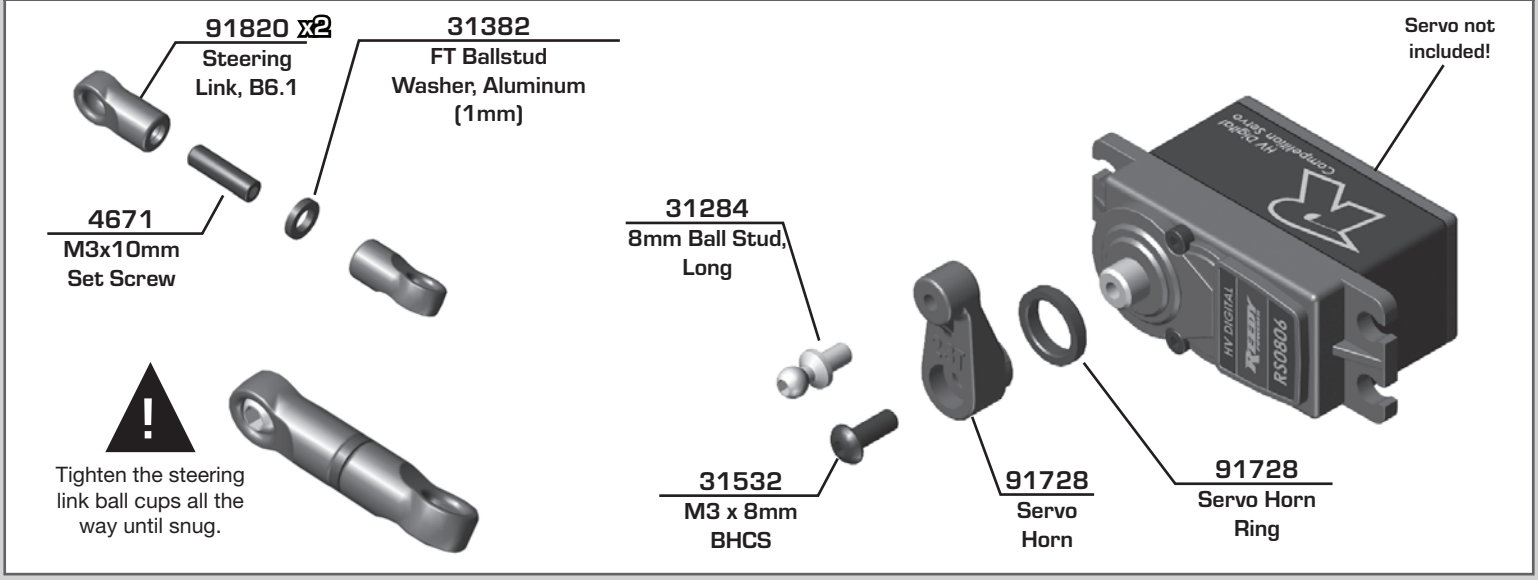


## :: Bag 2 - Step 4

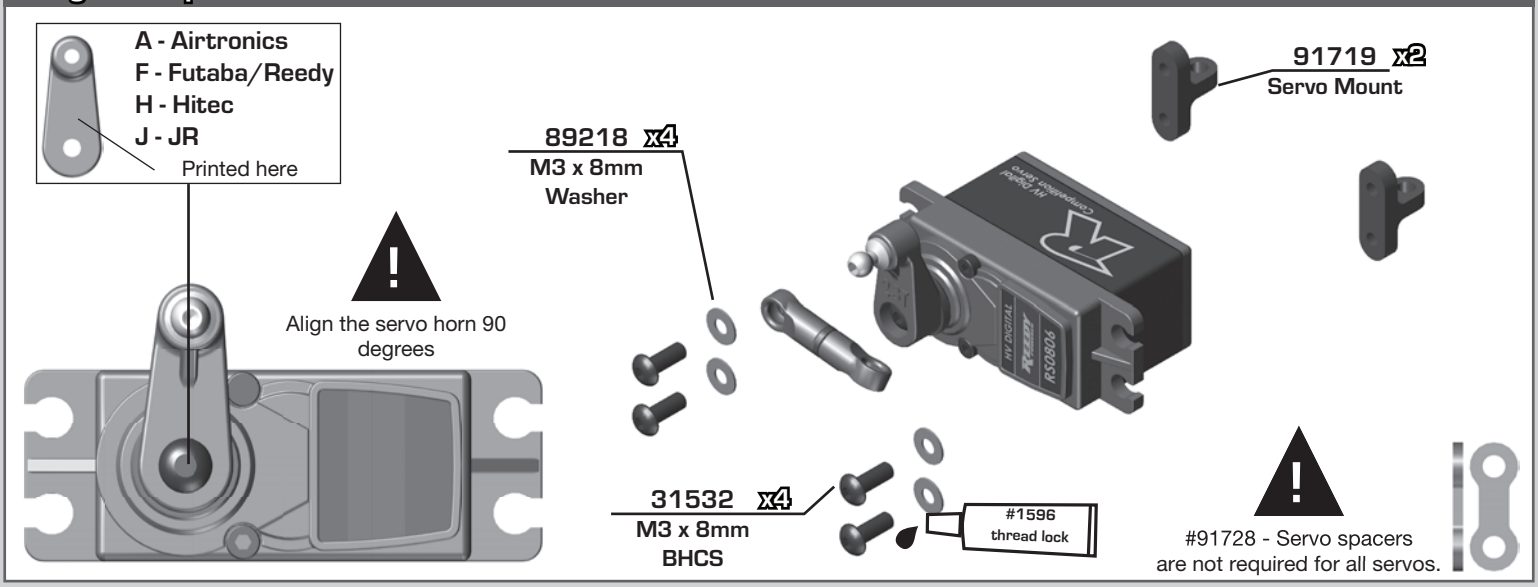

## :: Bag 2 - Step 5

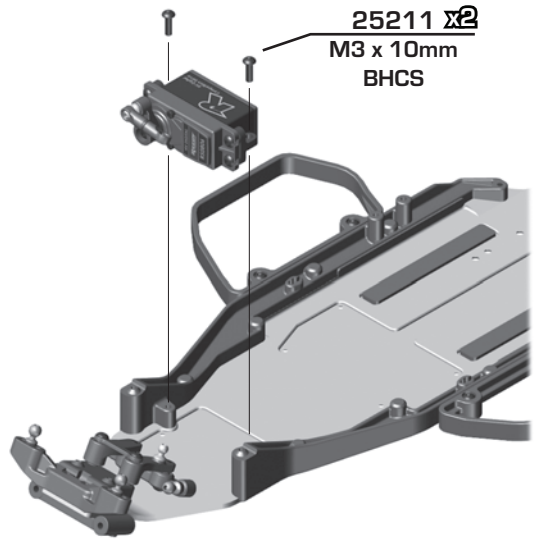


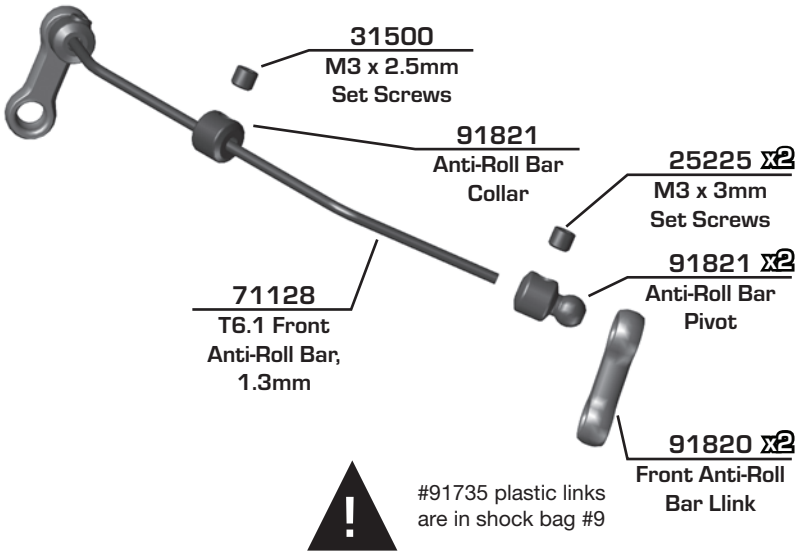


#91735 plastic links are in shock bag #9

## :: Bag 2 - Step 6

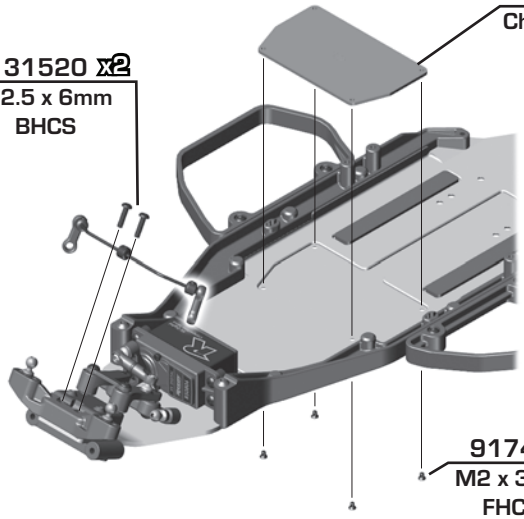


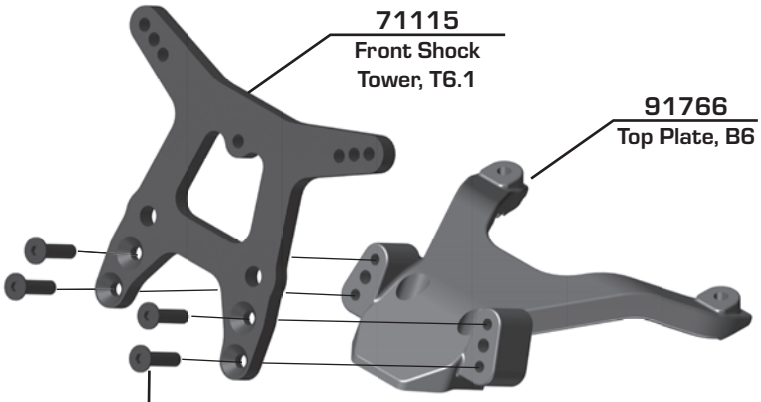


## :: Bag 2 - Step 7


Note: Post location may vary based on body used. Recommended starting spot marked.

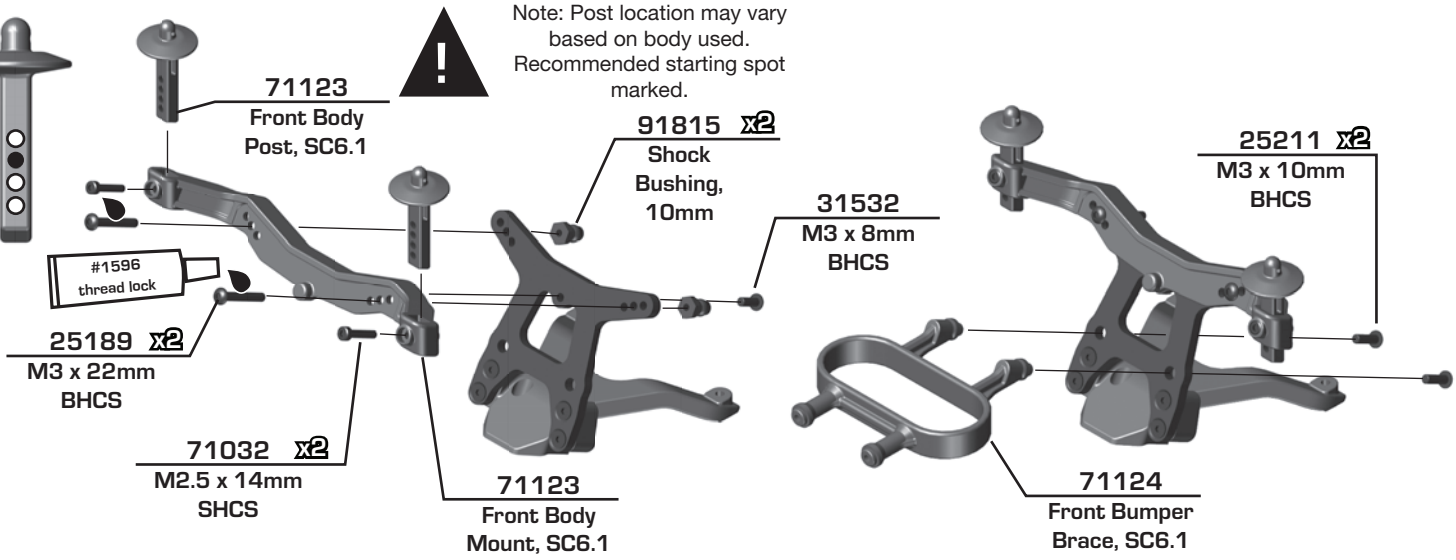

## :: Bag 2 - Step 8

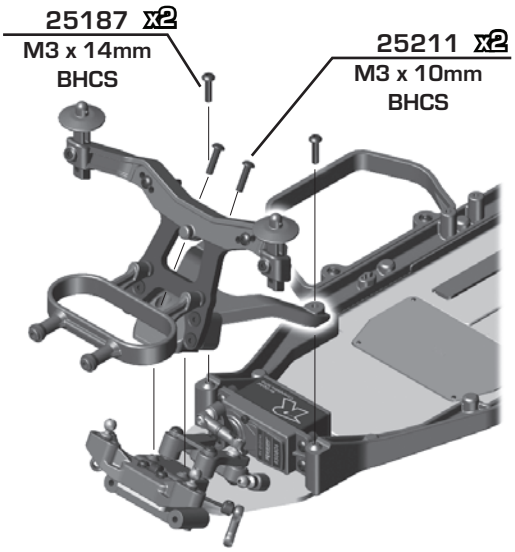


The front hinge pin brace has a sharp edged side, and a rounded edge side. Mount the sharp edge side towards the bulkhead.

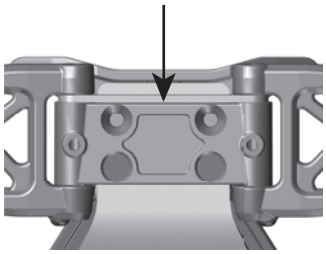

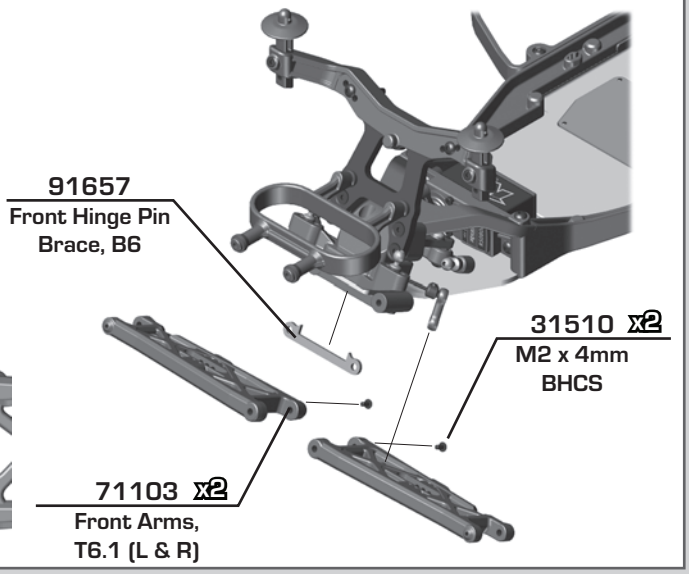


## :: Bag 2 - Step 9

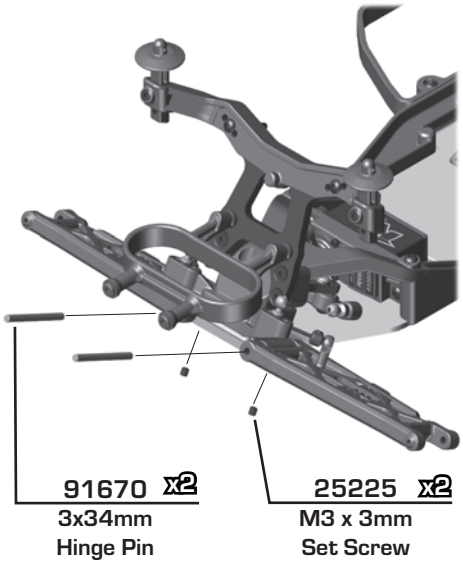


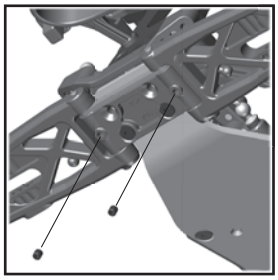

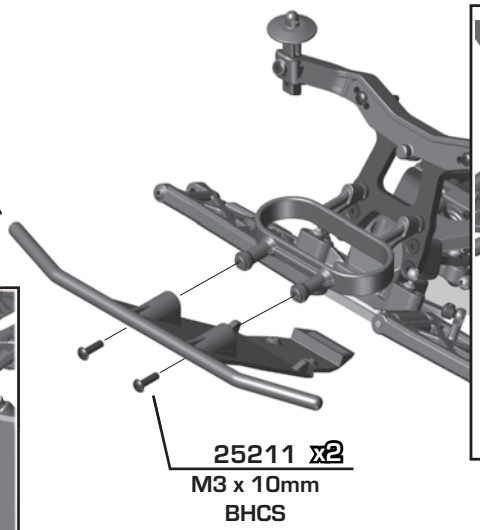


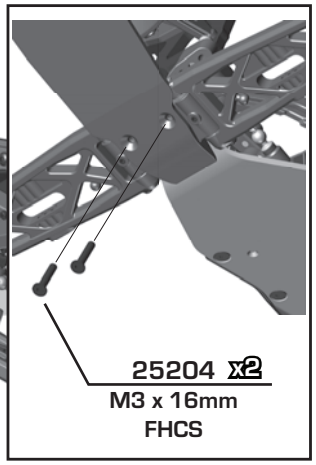


## :: Bag 3 - Step 1

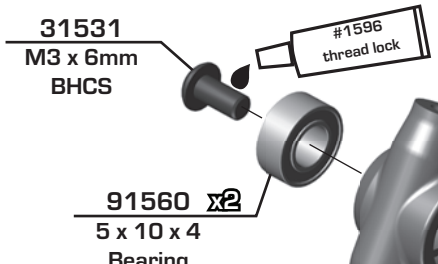


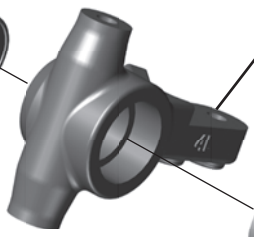



There are two sets of steering blocks included with your SC6.2: 3mm or 4mm trailing axle. The kit setups uses 4mm steering blocks.

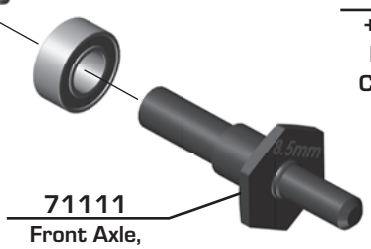


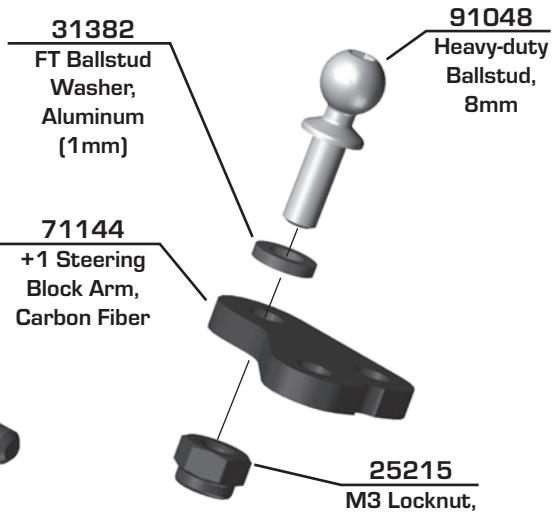


**Build 2 (1 left, 1 right)**

## :: Bag 3 - Step 2

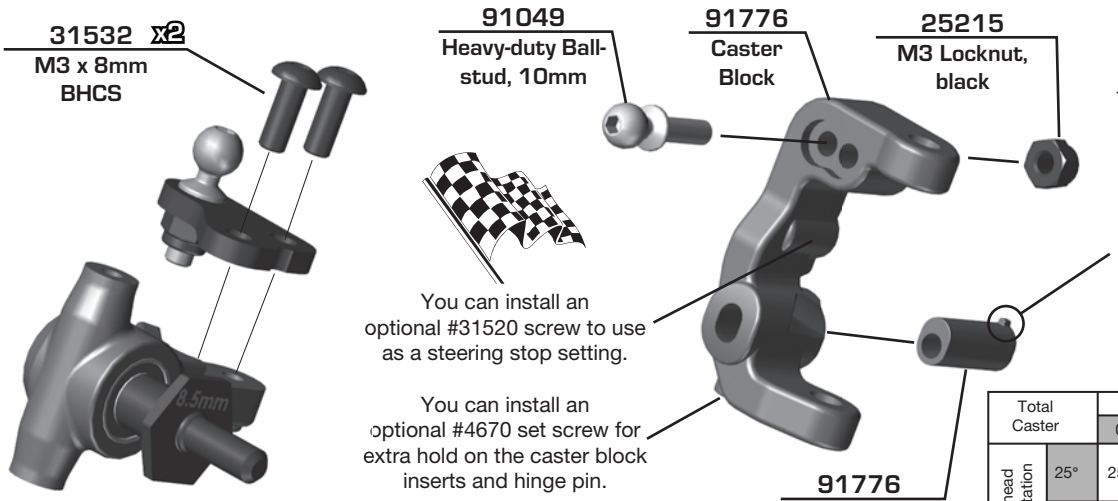


There are three caster block inserts included (0°, +/- 2.5°, +/- 5°). +5° is the standard insert used.
Tab up = positive caster
Tab down = negative caster

| Total Caster | | Caster Block Insert | | | | |
|---|---|---|---|---|---|---|
| | | 0 | 2.5 up | 2.5 down | 5 up | 5 down |
| Bulkhead Orientation | 25° | 25° | 27.5° | 22.5° | 30° | 20° |
| | 30° | 30° | 32.5° | 27.5° | 35° | 25° |

**Build 2 (1 left, 1 right)**

## :: Bag 3 - Step 3

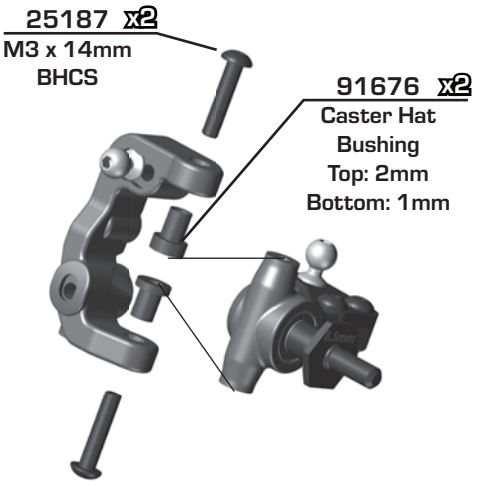


#91670 - Hinge Pin will be tight in the caster blocks, but should rotate freely in the front arms.

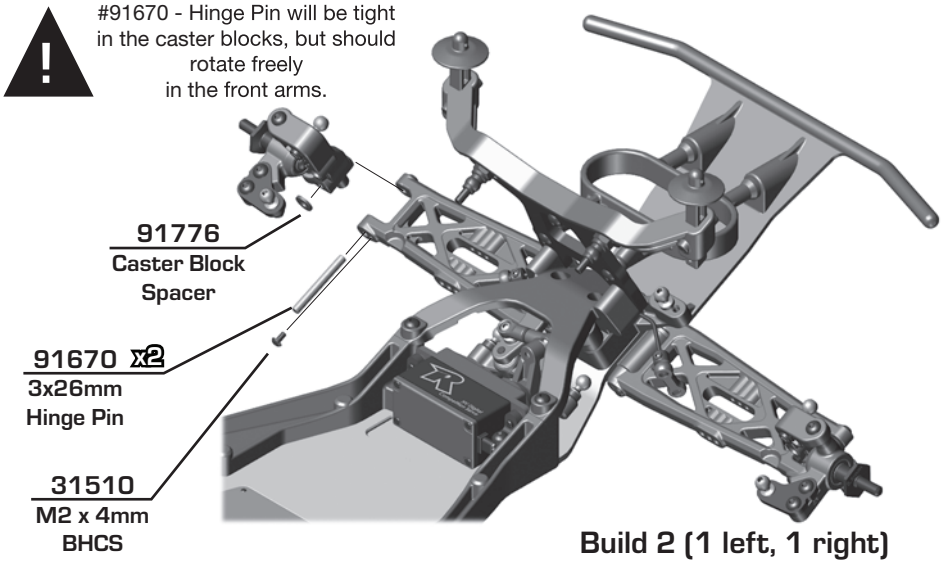


**Build 2 (1 left, 1 right)**

**Build 2 (1 left, 1 right)**

## :: Bag 4 - Step 1

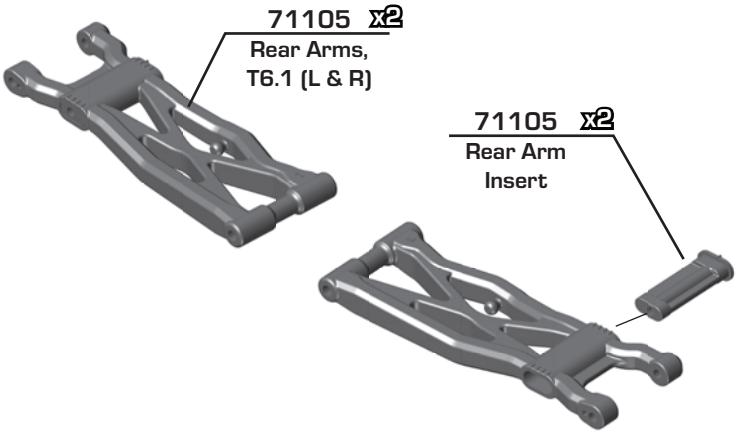


Install the rear arm insert in the same position for the left and right side arms!

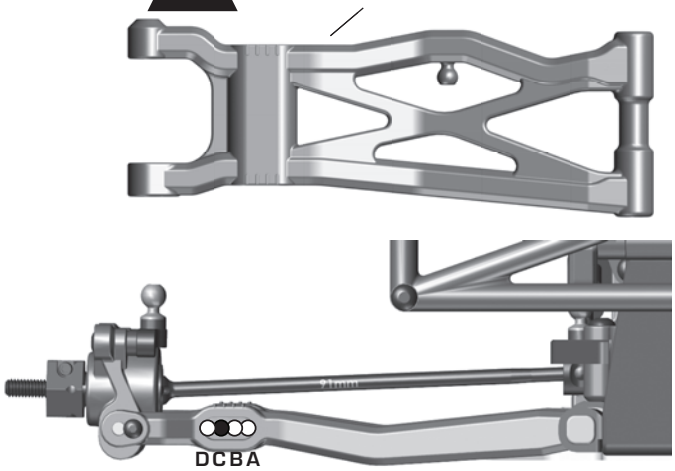

## :: Bag 4 - Step 2

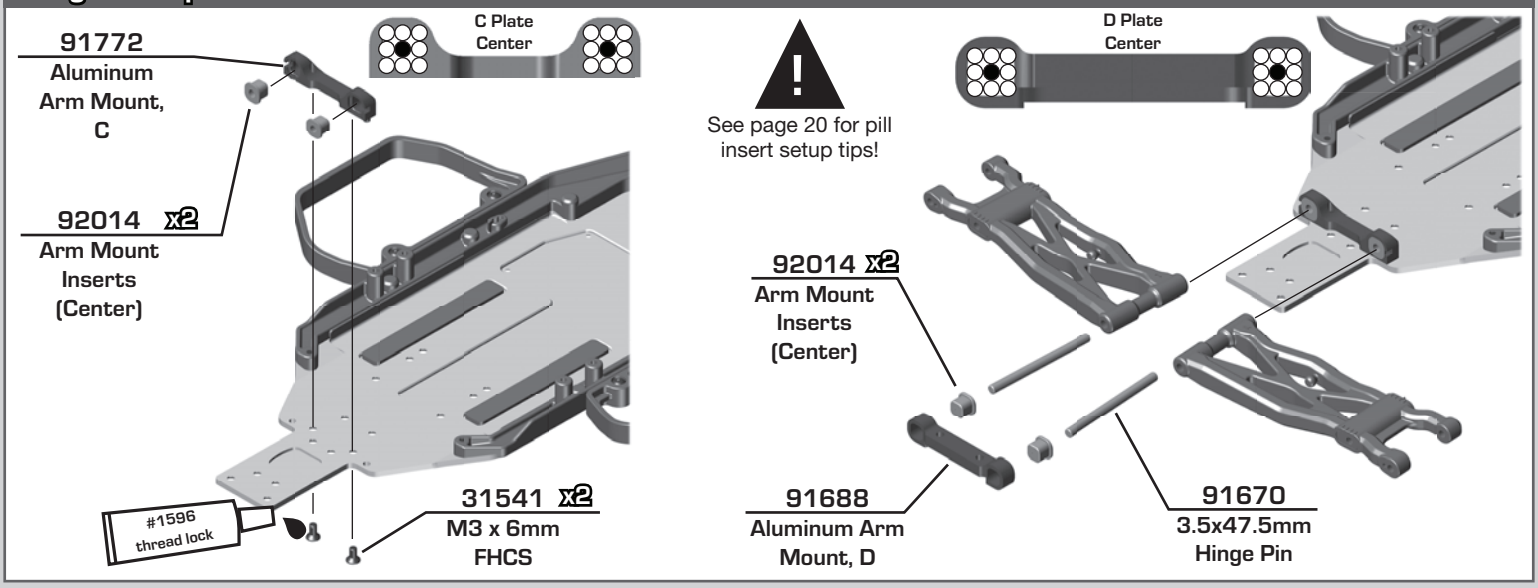


## :: Bag 5 - Step 1

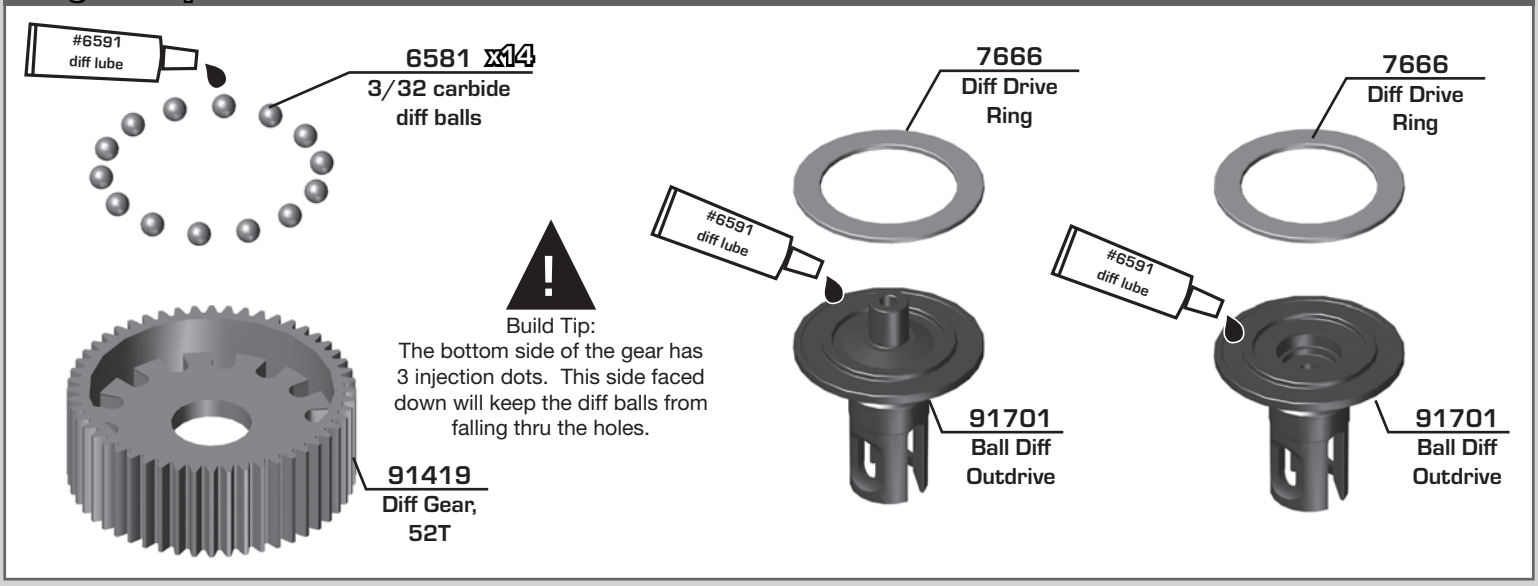


## :: Bag 5 - Step 2

## :: Bag 5 - Step 3


As you tighten the diff bolt, you will notice the T-nut ears moving closer to the bottom of the outdrive slot. This compresses the spring behind the T-nut. The spring should be completely compressed at the time the T-nut reaches the end of the slot. Caution! Pay close attention to the feeling when the spring is completely compressed. Do not overtighten the bolt. When you feel the spring completely compressed, loosen the diff bolt 1/8" of a turn. Your diff should now operate smoothly but with resistance as the outdrives move in opposite directions. After you have driven the car once, re-check the diff setting.

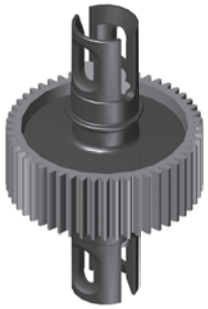

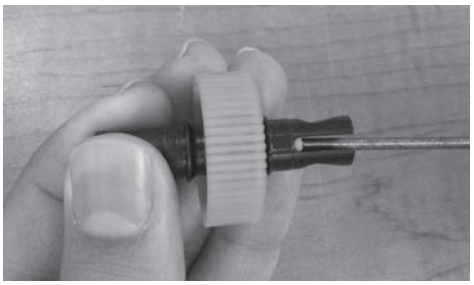

## :: Bag 6 - Step 1

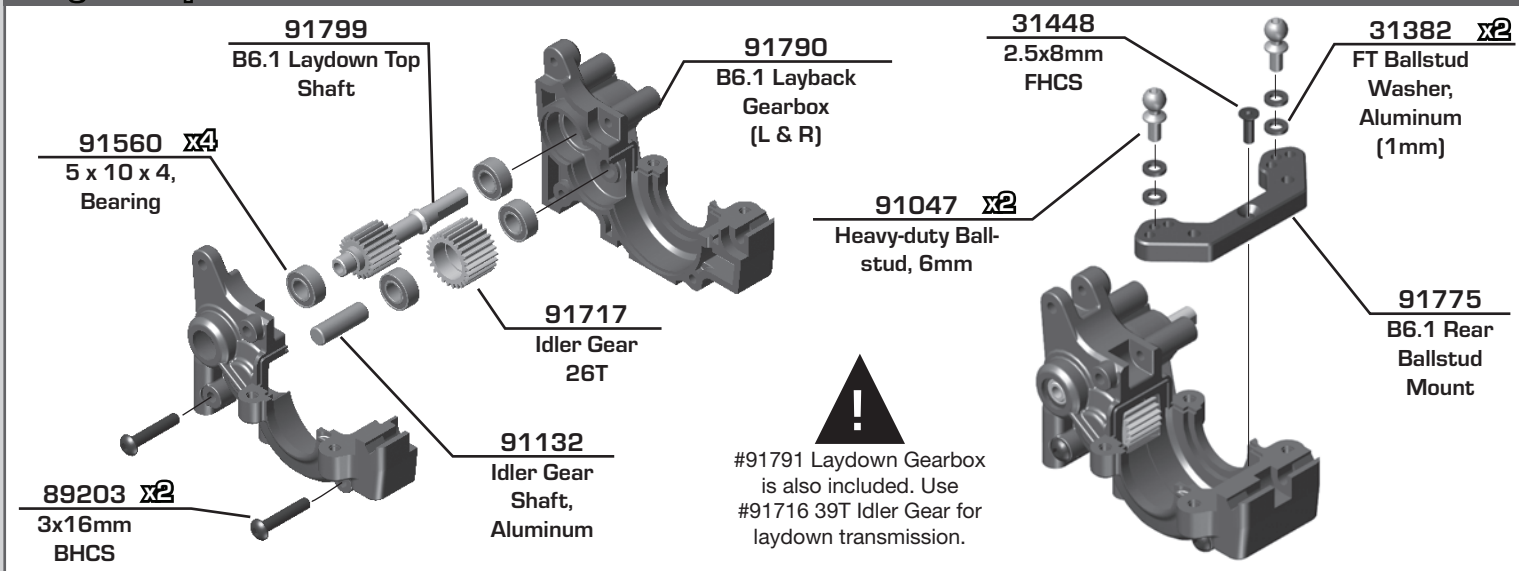


#91791 Laydown Gearbox is also included. Use #91716 39T Idler Gear for laydown transmission.

## :: Bag 6 - Step 2

| Diff Height | |
|---|---|
| 3 | 3 |
| 2 | 2 |
| 1 | 1 |
| 0 | 0 Kit Setup |

Add a drop of Diff Lube (#6591) to the teeth of the diff gear, idler gear, and top shaft.

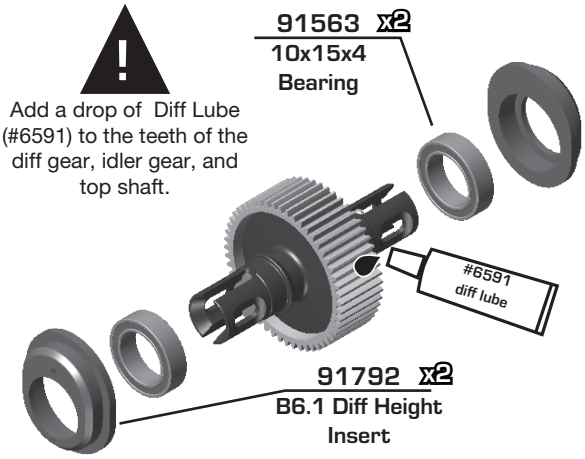


Diff Height Inserts: The number on top is the setting. Stock diff height is 0.

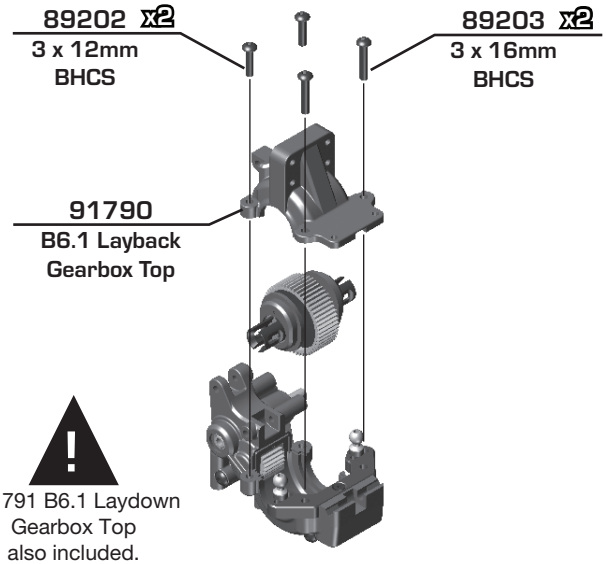


#91791 B6.1 Laydown Gearbox Top also included.

## :: Bag 6 - Step 3

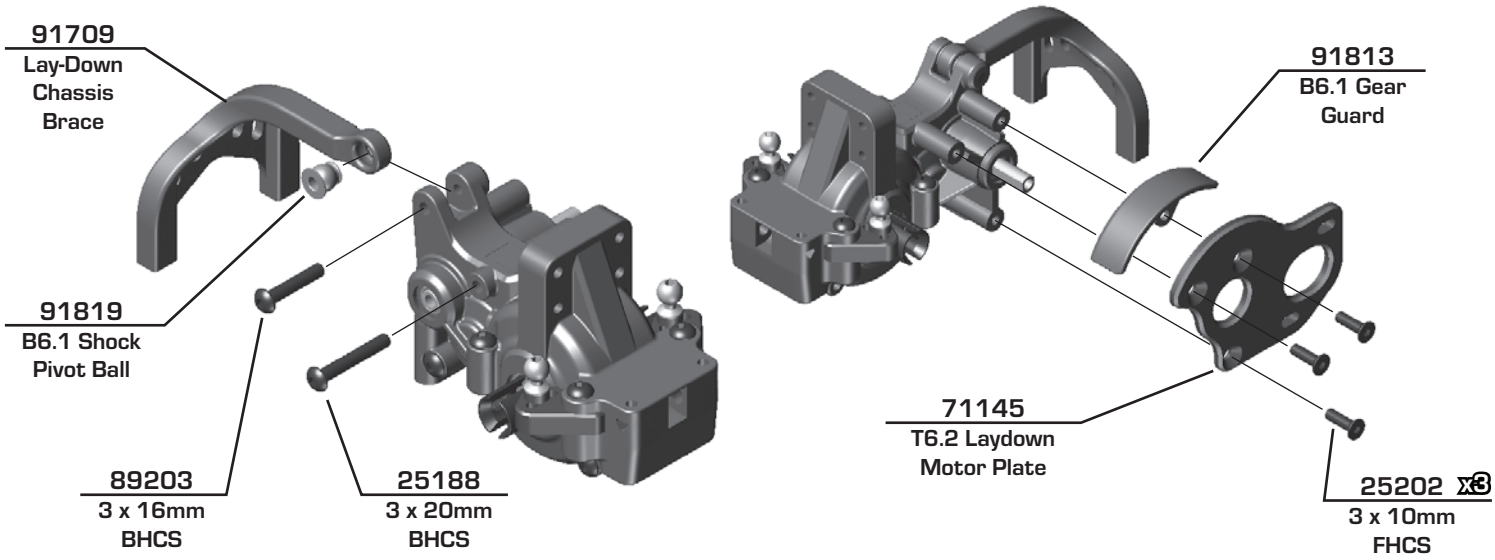


## :: Bag 6 - Step 4

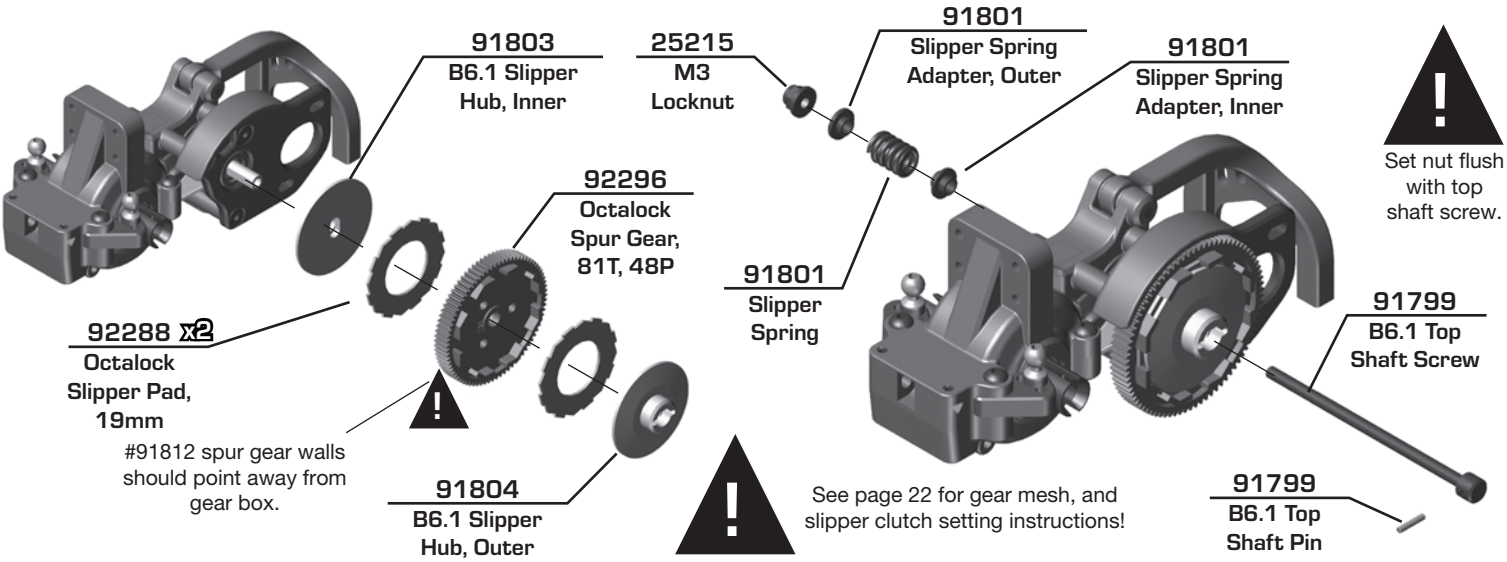


## :: Bag 6 - Step 5

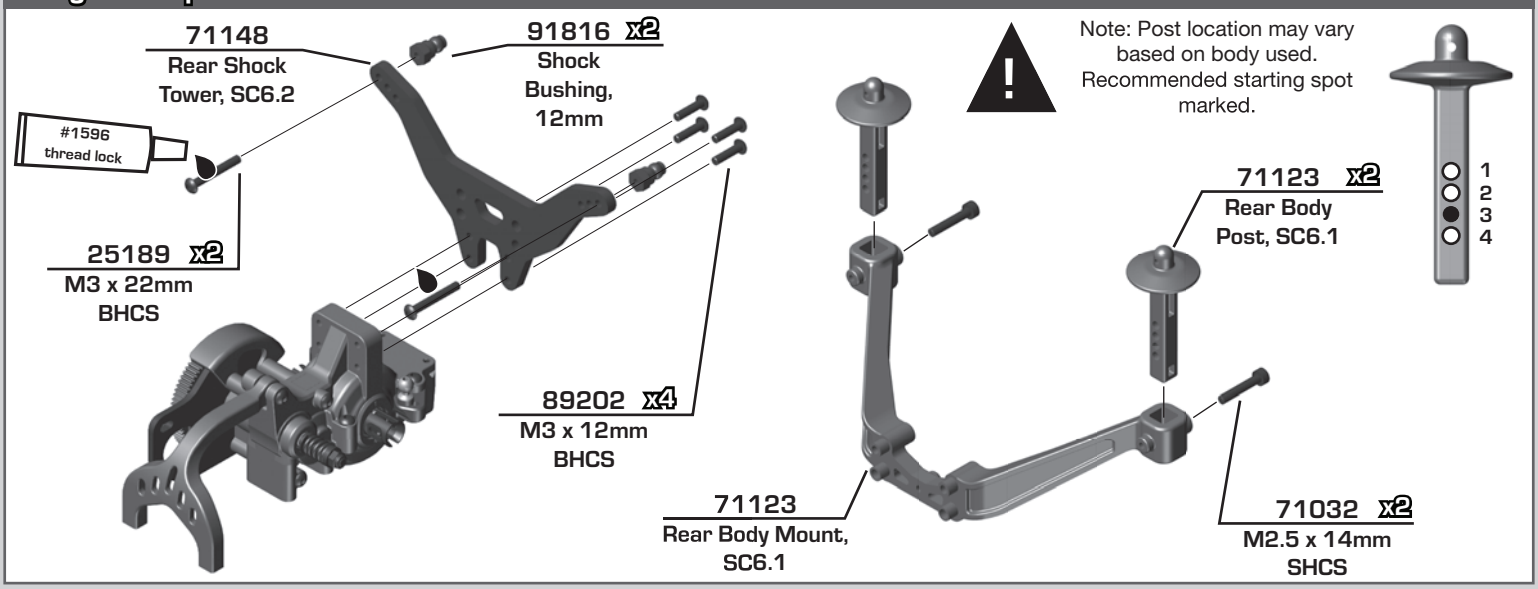

## :: Bag 6 - Step 6

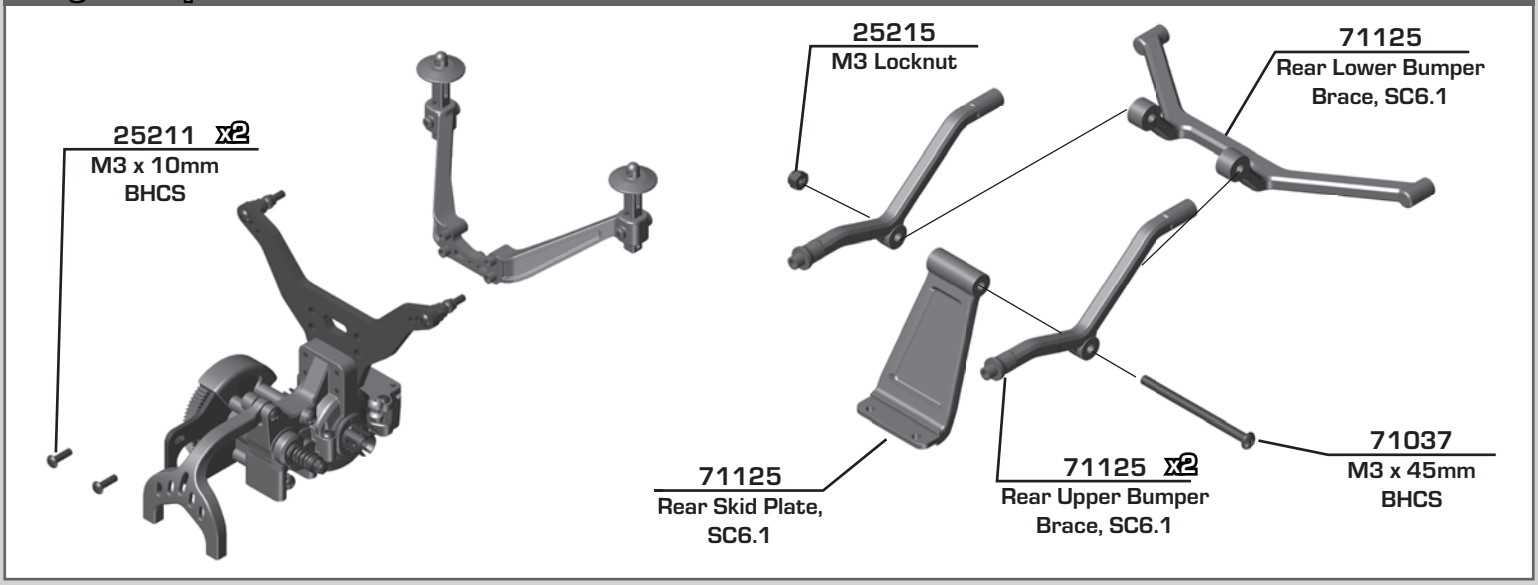


## :: Bag 6 - Step 7

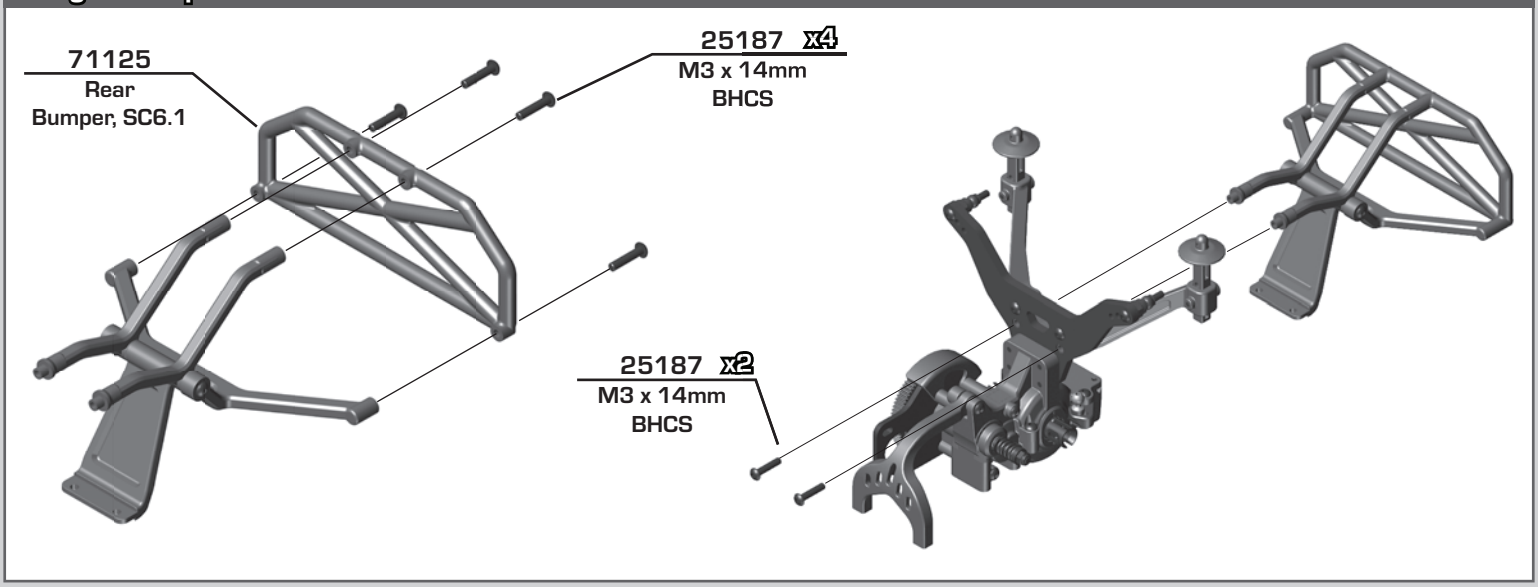


## :: Bag 6 - Step 8

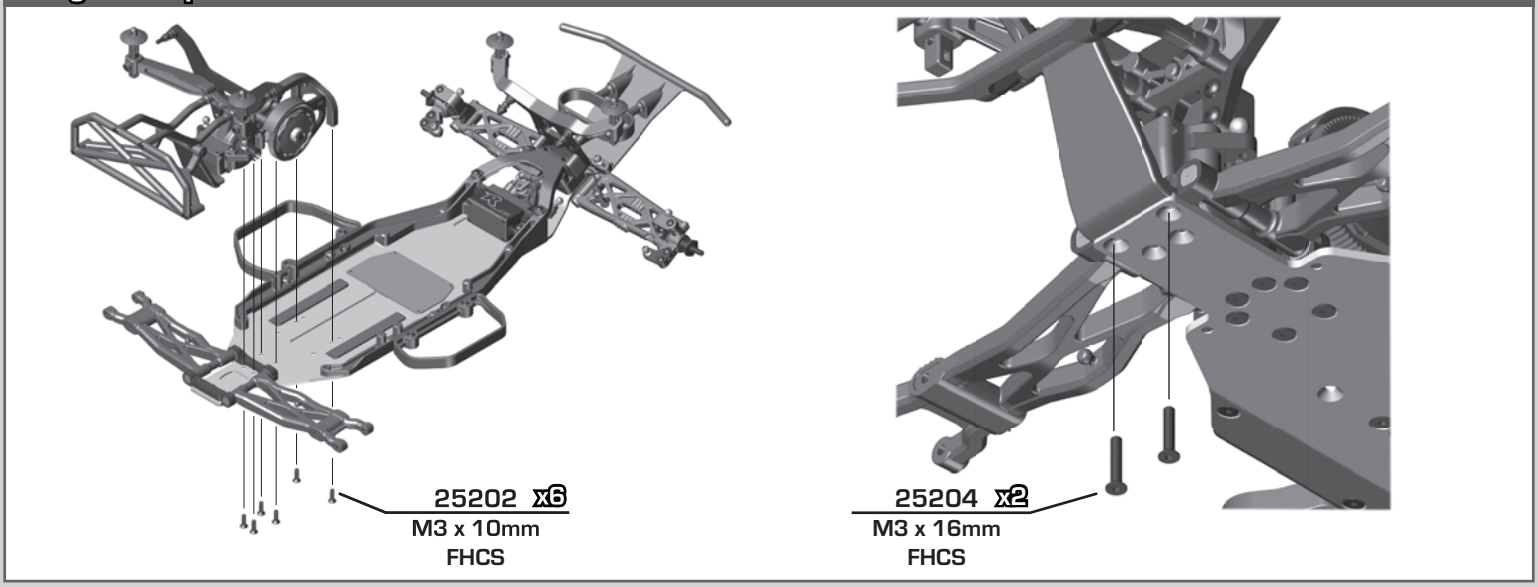

## :: Bag 7 - Step 1

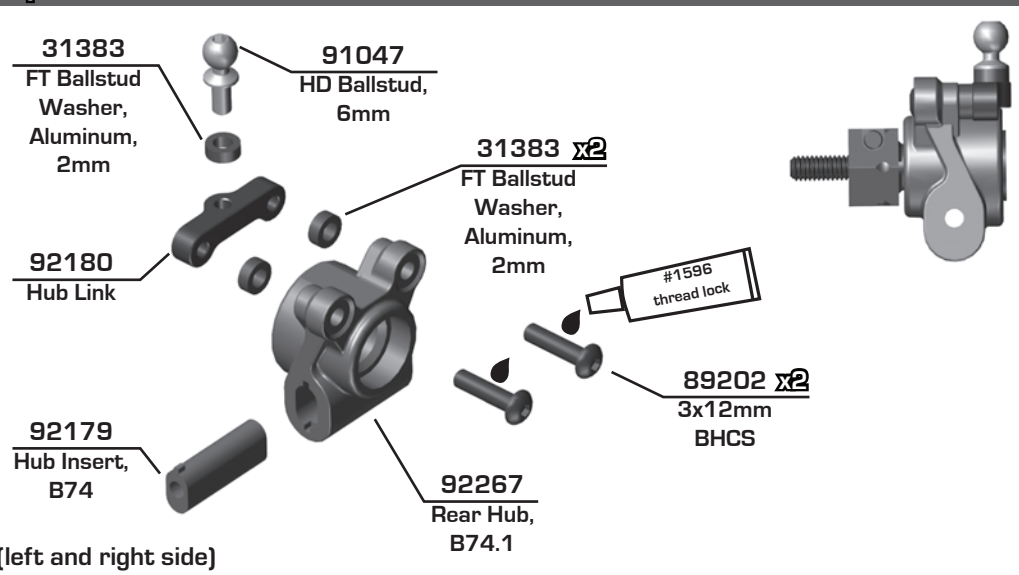


Build x2 (left and right side)

| Rear Axle Height | | |
|---|---|---|
| | ↓0 3↑ | +3mm |
| | ↓1 2↑ | +2mm |
| | ↑1 2↓ | +1mm |
| | ↑0 3↓ | +0mm |

## :: Bag 7 - Step 2

Build x2 (left and right side)

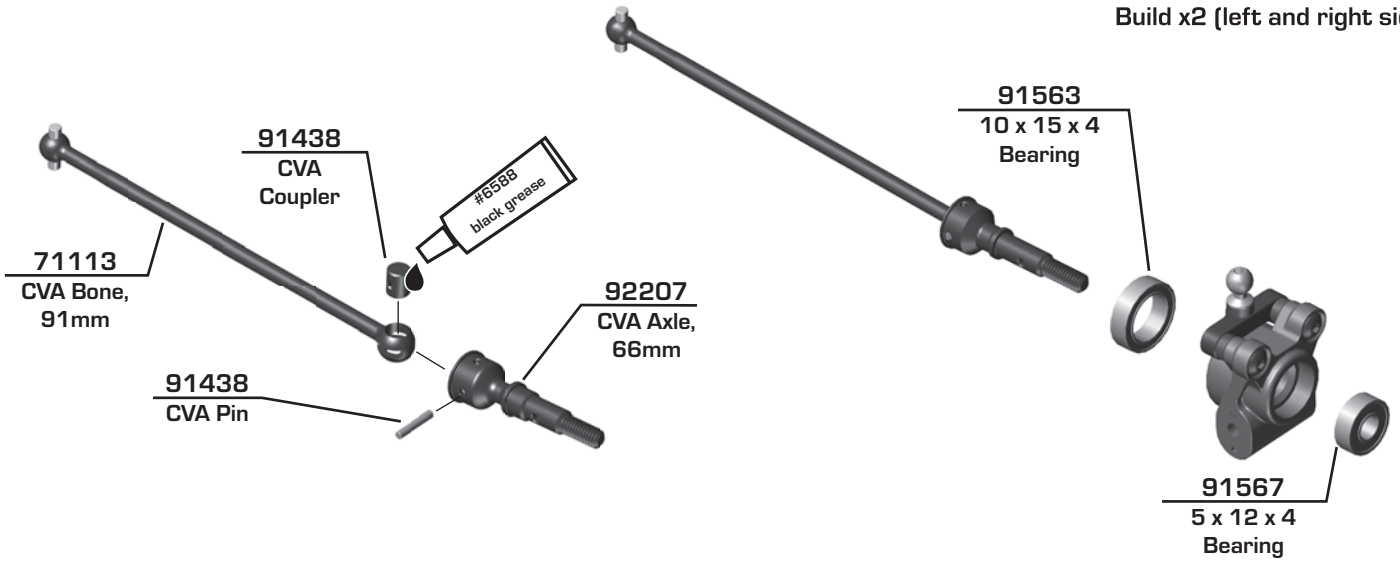


## :: Bag 7 - Step 3

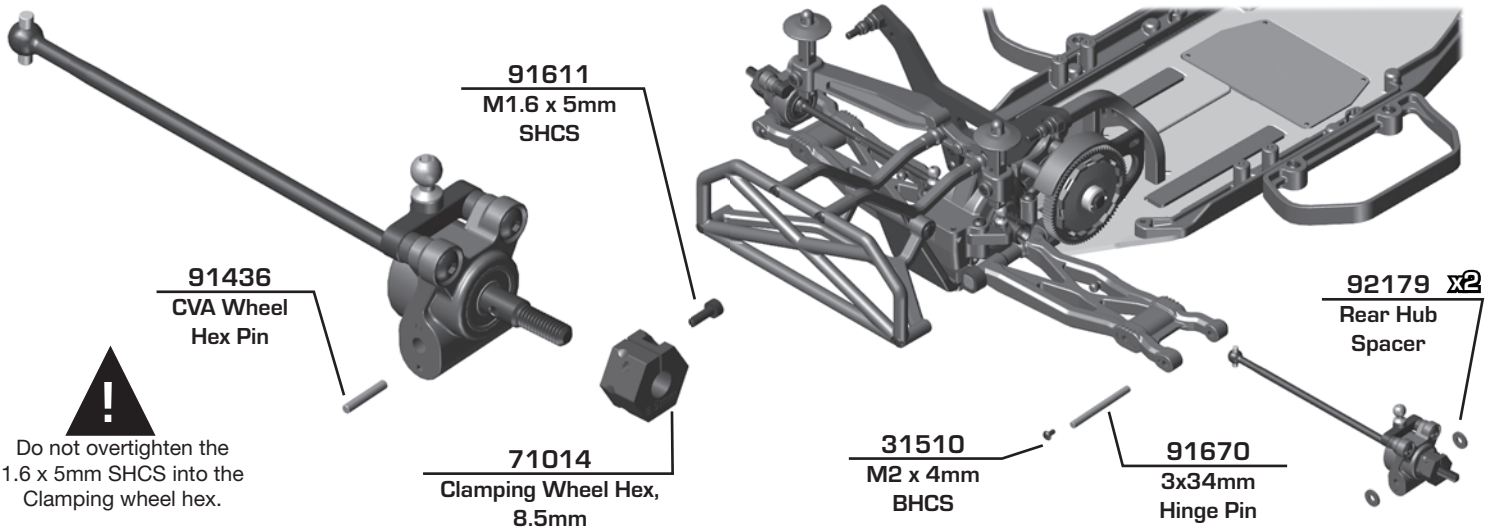


Do not overtighten the 1.6 x 5mm SHCS into the Clamping wheel hex.

Build x2 (left and right side)

Build x2 (left and right side)

## :: Bag 8 - Step 1

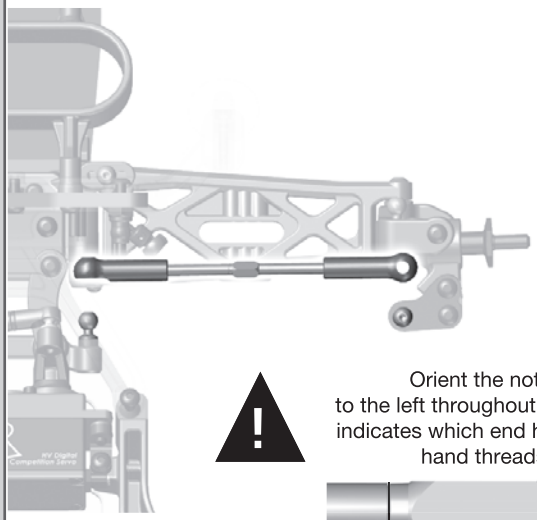

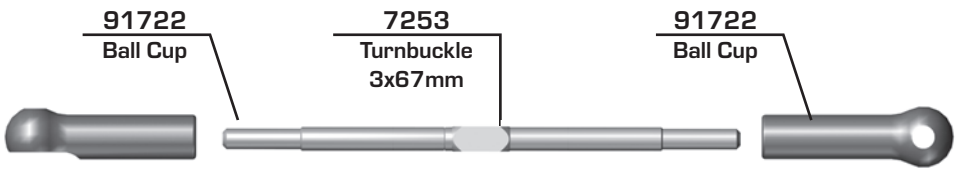


Racers Tip:

Use black grease (#6588) on the threads of the turnbuckles for easier ball cup installation!



Orient the notch to the left throughout the car. It indicates which end has the left hand threads!

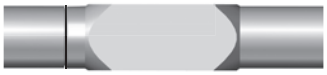

**Steering Turnbuckle**
**42.00mm**

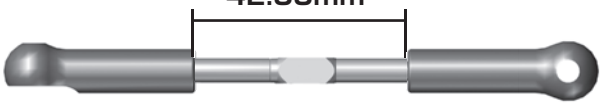

**Build x2 (left and right side)**

## :: Bag 8 - Step 2

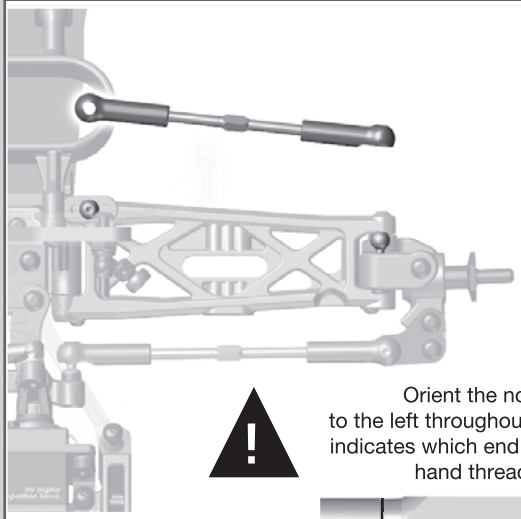

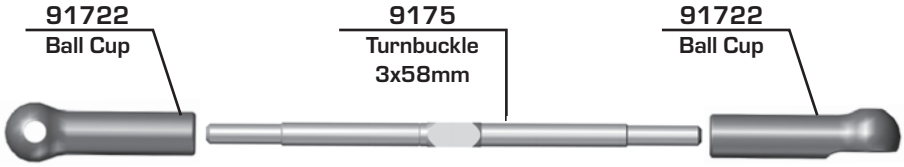


Racers Tip:

Use black grease (#6588) on the threads of the turnbuckles for easier ball cup installation!



Orient the notch to the left throughout the car. It indicates which end has the left hand threads!

**Front Camber Turnbuckle**
**36.50mm**

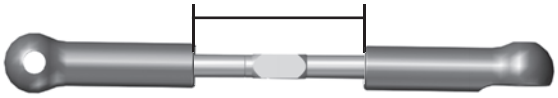

**Build x2 (left and right side)**

## :: Bag 8 - Step 3

Orient the notch to the left throughout the car. It indicates which end has the left hand threads!

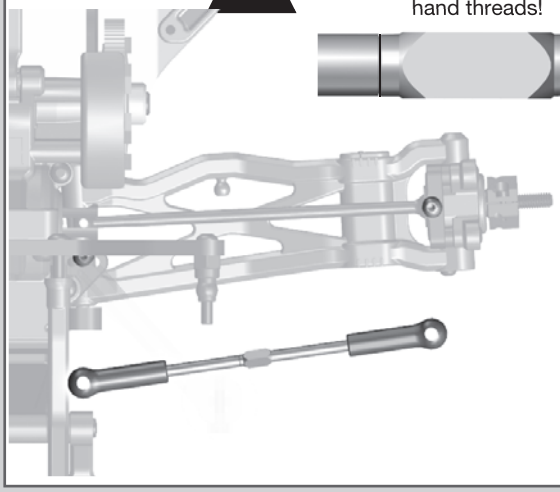

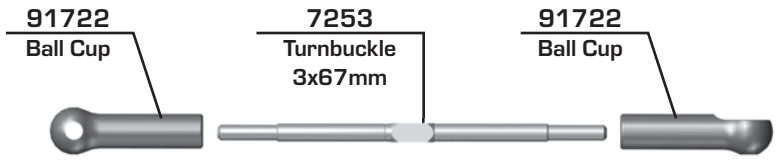


Racers Tip:

Use black grease (#6588) on the threads of the turnbuckles for easier ball cup installation!

**Rear Camber Turnbuckle**
**47.00mm**

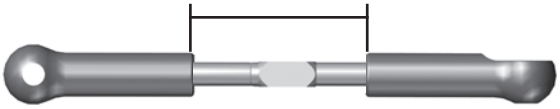

**Build x2 (left and right side)**

## :: Bag 9 - Step 1

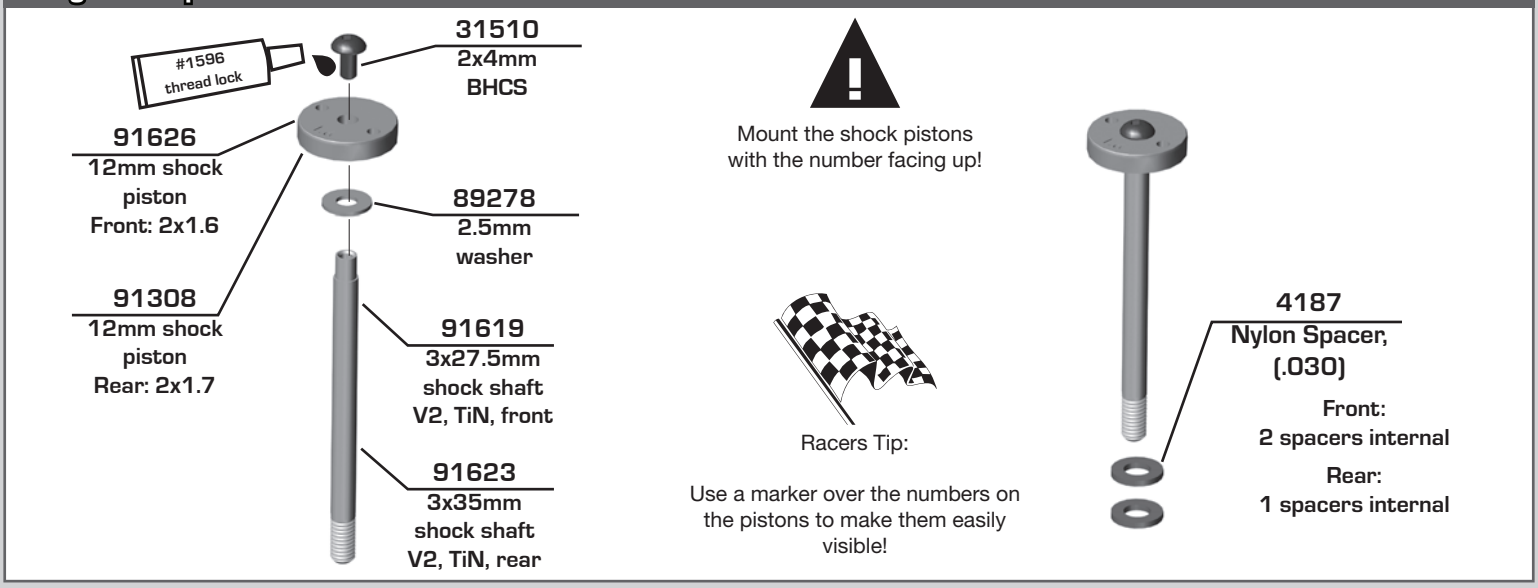


## :: Bag 9 - Step 2

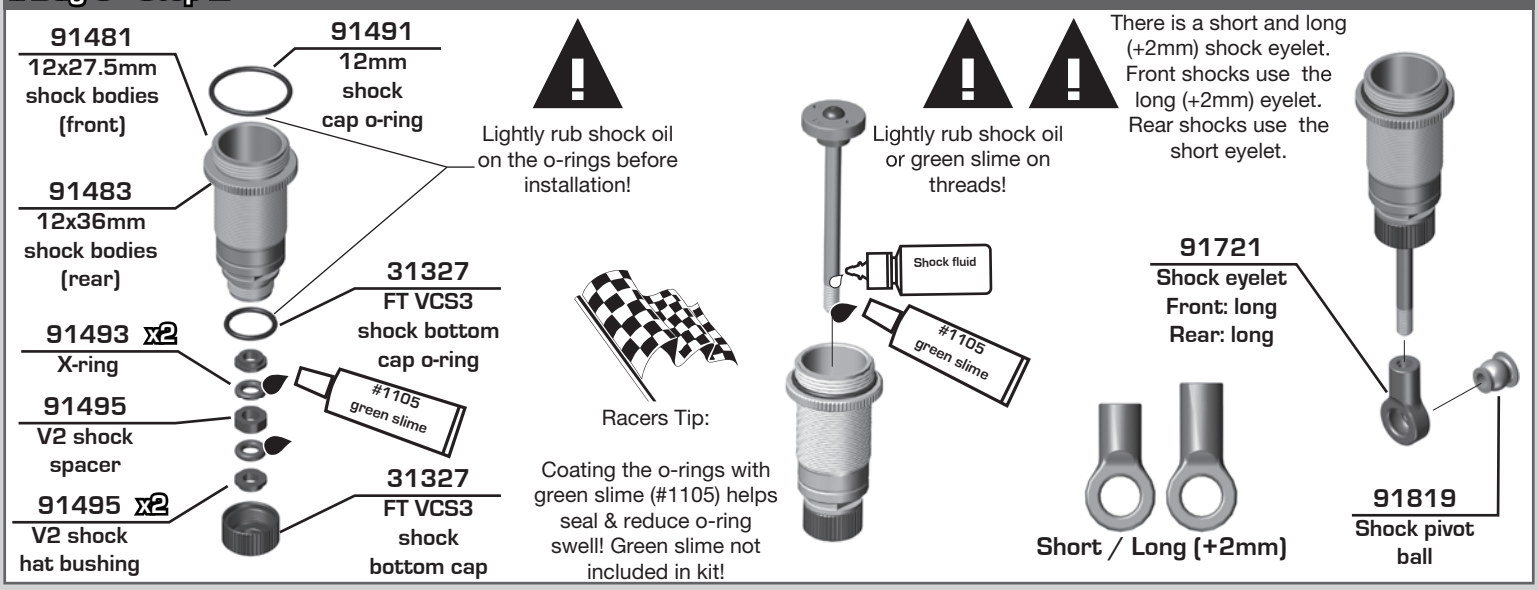


## :: Bag 9- Step 3

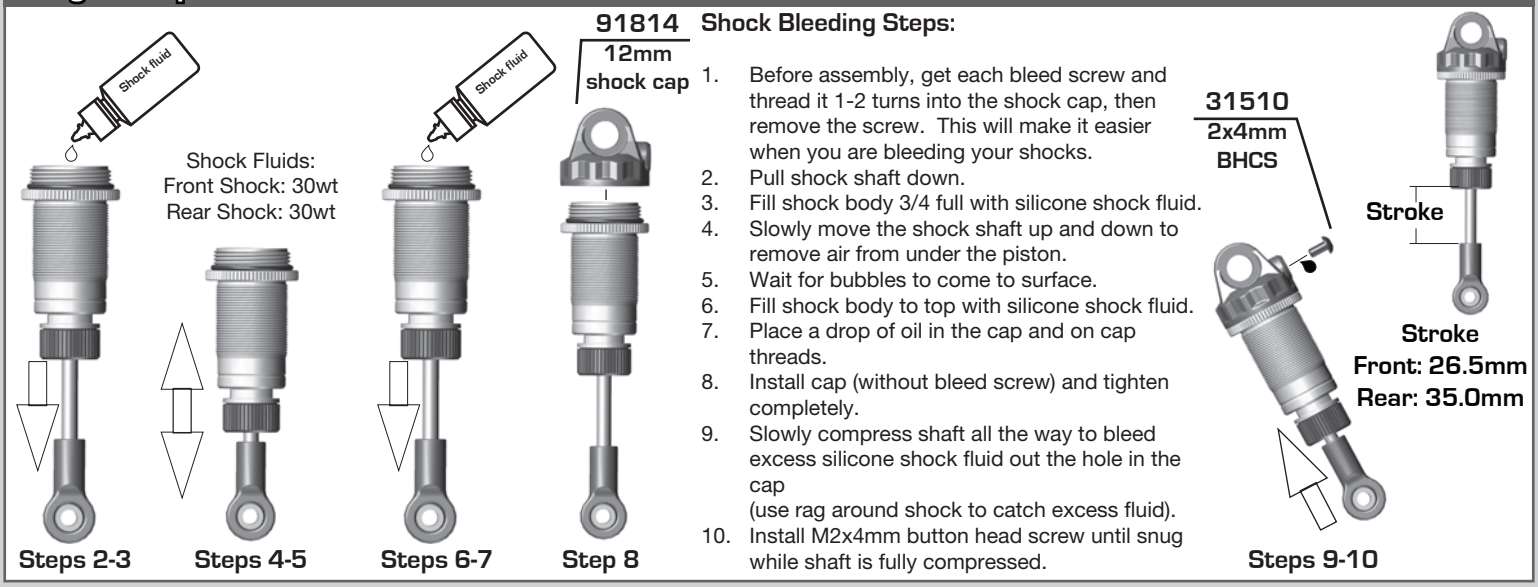


**Shock Bleeding Steps:**

1. Before assembly, get each bleed screw and thread it 1-2 turns into the shock cap, then remove the screw. This will make it easier when you are bleeding your shocks.
2. Pull shock shaft down.
3. Fill shock body 3/4 full with silicone shock fluid.
4. Slowly move the shock shaft up and down to remove air from under the piston.
5. Wait for bubbles to come to surface.
6. Fill shock body to top with silicone shock fluid.
7. Place a drop of oil in the cap and on cap threads.
8. Install cap (without bleed screw) and tighten completely.
9. Slowly compress shaft all the way to bleed excess silicone shock fluid out the hole in the cap
(use rag around shock to catch excess fluid).
10. Install M2x4mm button head screw until snug while shaft is fully compressed.

## :: Bag 9 - Step 4

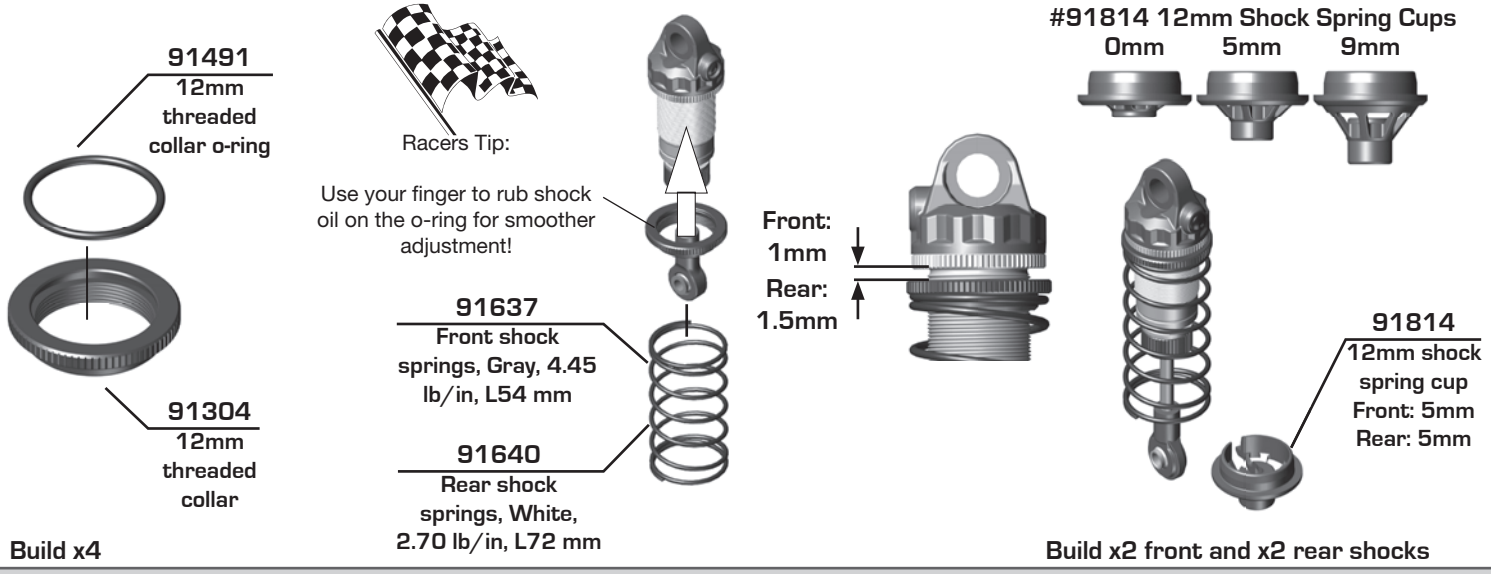


## :: Bag 10 - Step 1

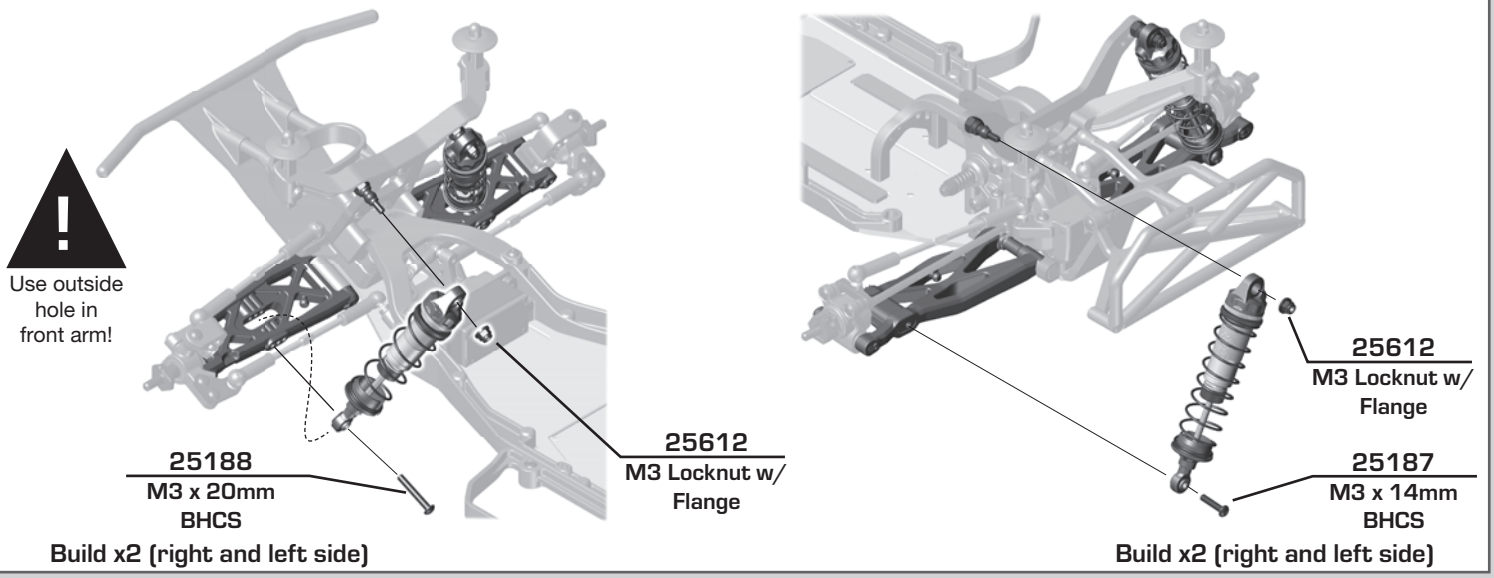


## :: Bag 10 - Step 2

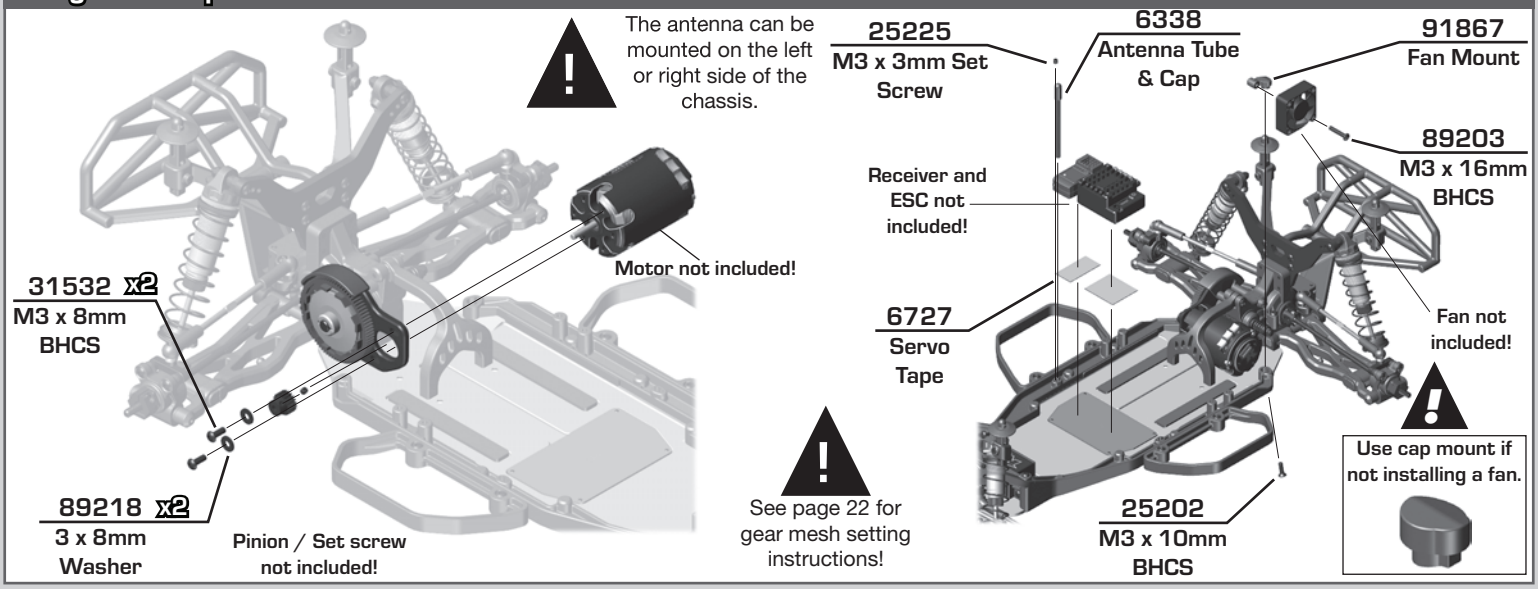

## :: Bag 10 - Step 3

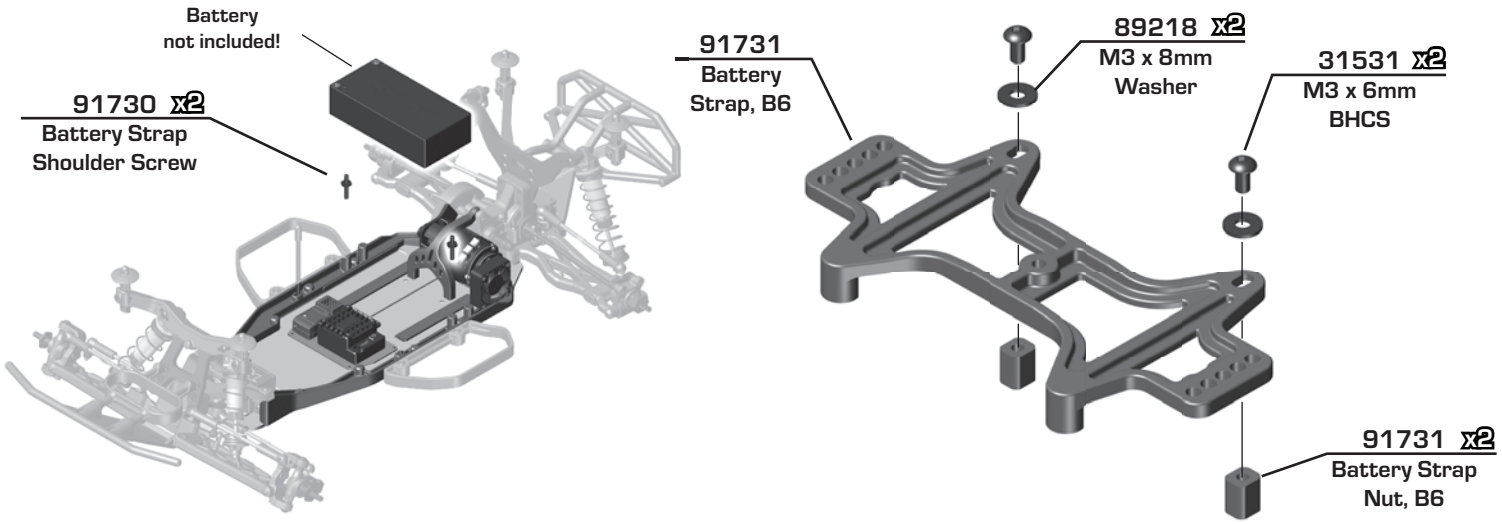


## :: Bag 10 - Step 4

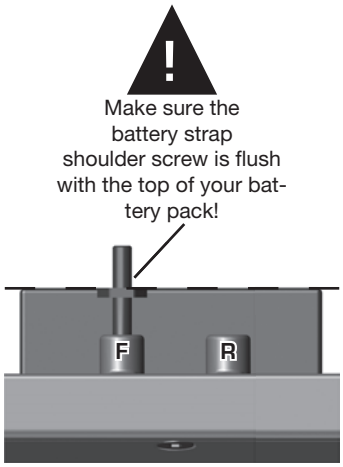


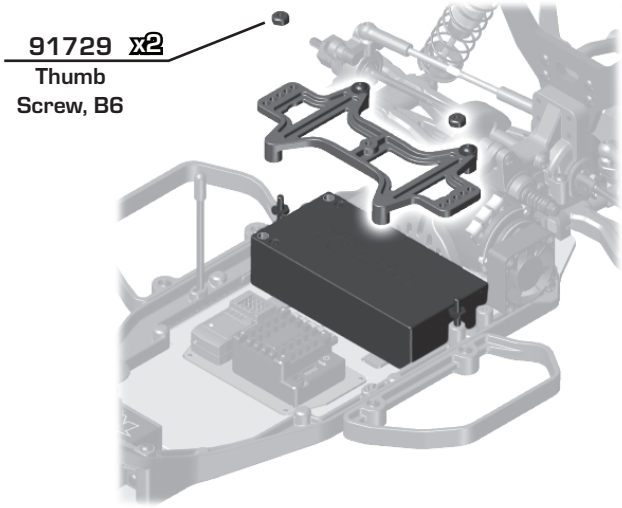


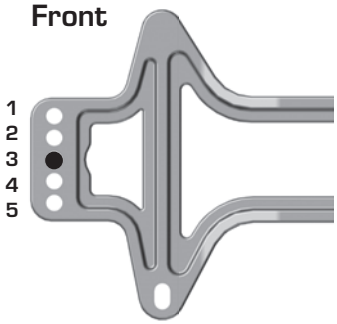


## :: Bag 10 - Step 3

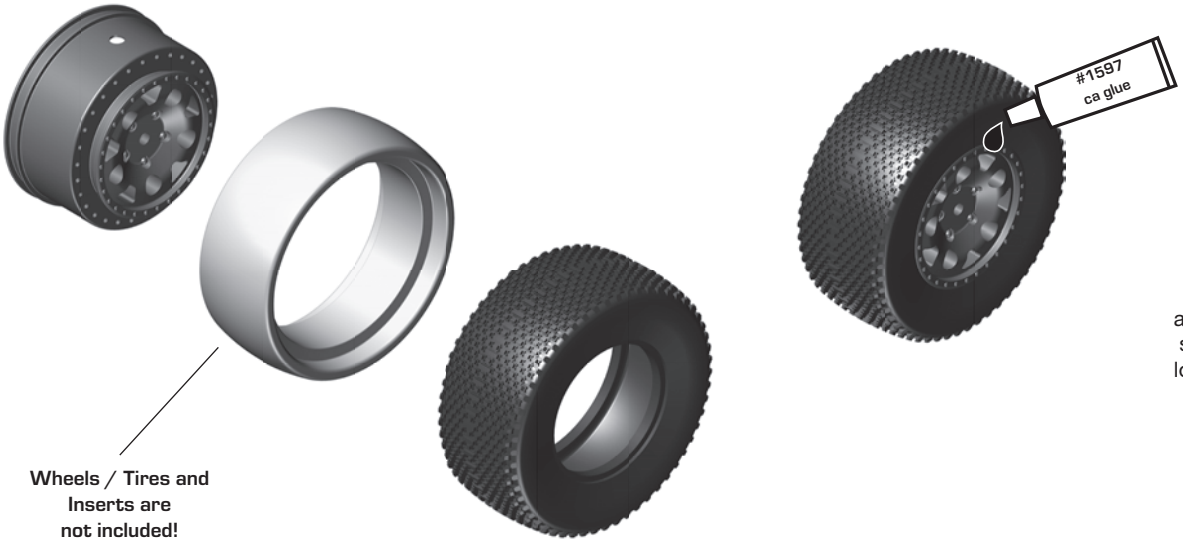


Carefully apply ca glue (tire adhesive) to the tire bead on the side. Do one side at a time, allowing it to dry before gluing the other side!
CA glue not included!

**Build x4**

## :: Bag 10 - Step 6

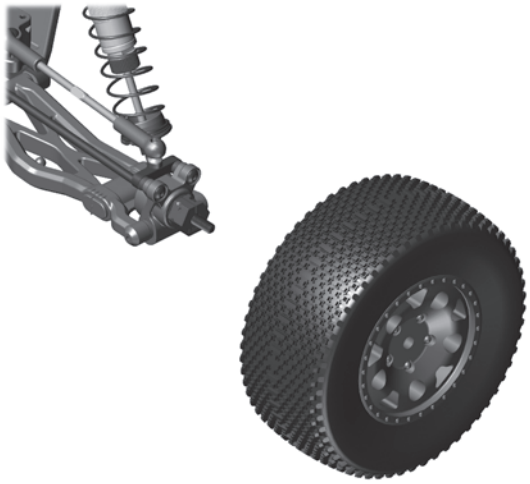

91150
M4 LP Flanged Serrated Nut, Steel

Build 2 (1 left, 1 right)

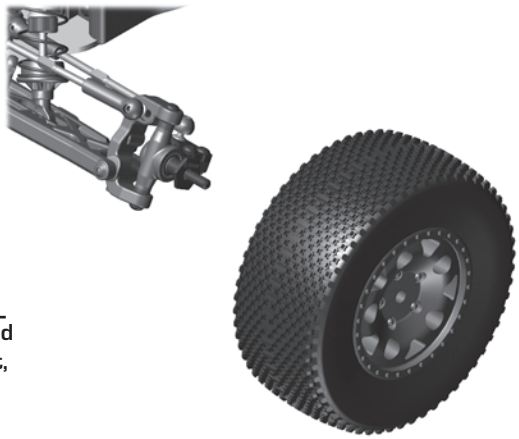

91150
M4 LP Flanged Serrated Nut, Steel

Build 2 (1 left, 1 right)

## :: Rear Shock Mounting Option - Step 1

Use this setup to mount shocks on front of the rear arm. Suggested for high grip conditions.

Shocks mounted on the front of the rear arm increases forward weight bias.

- Less rear grip
- More / faster corner rotation

The screws are included in this kit!

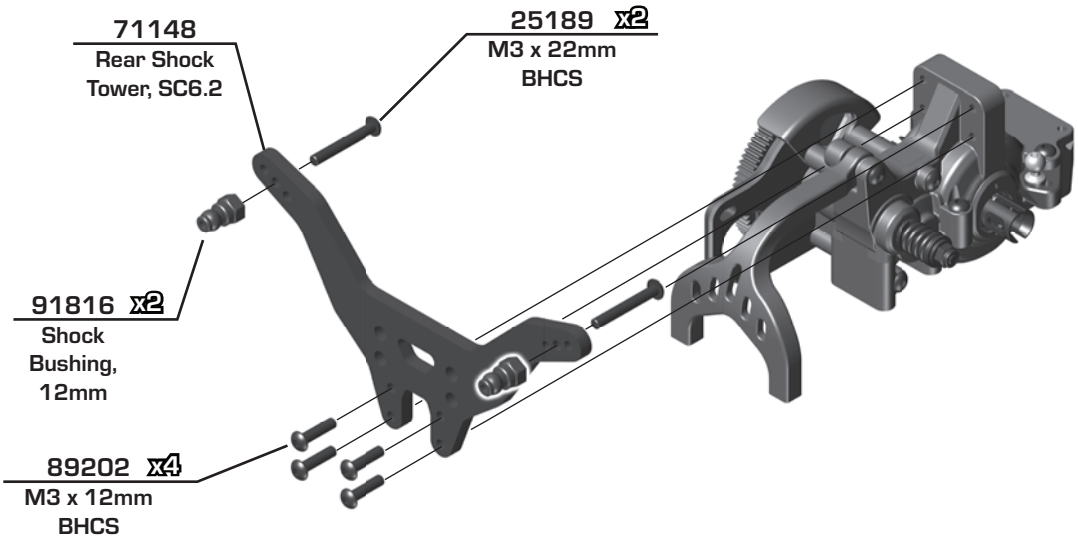


## :: Rear Shock Mounting Option - Step 2

The screws are included in this kit!

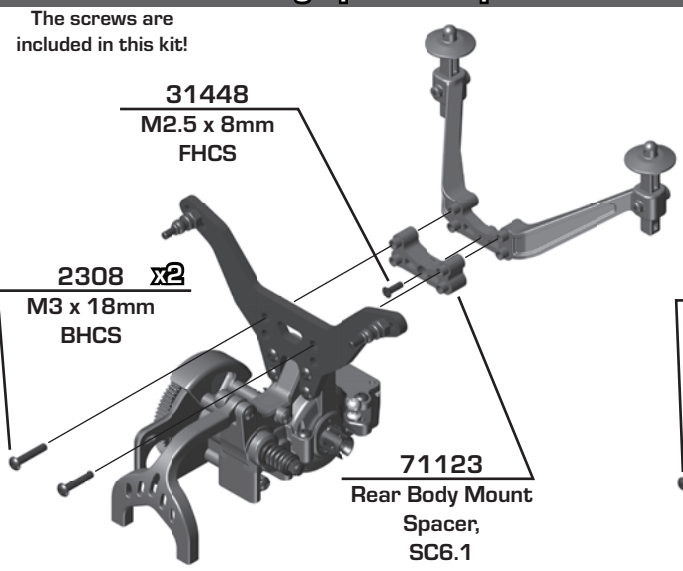


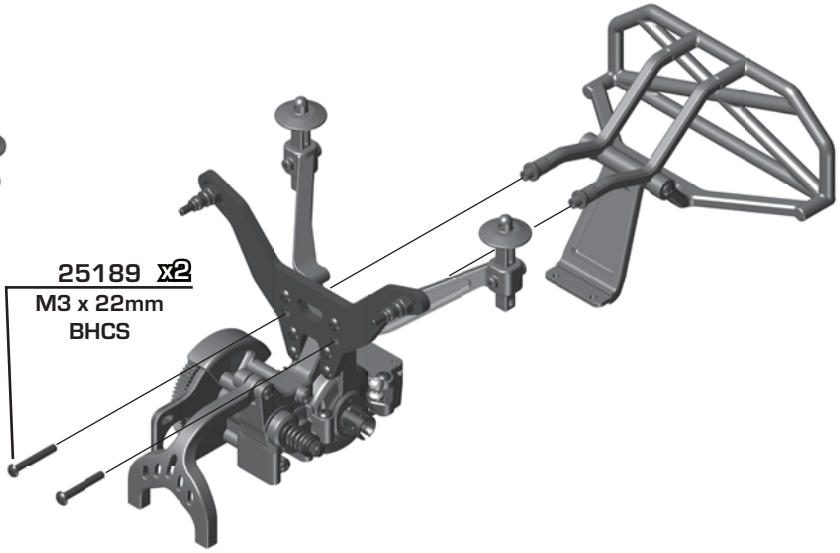

## :: Tuning Tips - Painting, Beginners

### Painting:

Your Kit requires a clear polycarbonate body. You will need to prep the body before you can paint it.
Wash the INSIDE thoroughly with warm water and liquid detergent (do not use any detergents with scents or added hand lotion ingredients!). Dry the body using a clean, soft, lint-free cloth. Use the supplied window masks to cover the windows from the INSIDE of the body (RC bodies get painted on the inside). Using high quality masking tape, apply tape to the inside of the body to create a design. Spray (use either rattle can or airbrush) the paint on the inside of the body (preferably dark colors first, lighter colors last). NOTE: ONLY use paint that is recommended for (polycarbonate) plastics. If you do not, you can destroy the body! After the paint has completely dried (usually after 24 hours), cut the body along the trim lines. Make sure to drill or use a body reamer to make the holes for the antenna if needed! Use hook and loop tape to secure the body to the side rails of the vehicle.

### Tips for Beginners:

Before making any changes to the standard setup, make sure you can get around the track without crashing. Changes to your vehicle will not be beneficial if you can't stay on the track. Your goal is consistent laps. Once you can get around the track consistently, start tuning your vehicle. Make only ONE adjustment at a time, testing it before making another change. If the result of your adjustment is a faster lap, mark the change on the included setup sheet (make adddtional copies of the sheet before writing on it). If your adjustment results in a slower lap, revert back to the previous setup and try another change. When you are satisfied with your vehicle, fill in the setup sheet thoroughly and file it away. Use this as a guide for future track days or conditions. Periodically check all moving suspension parts. Suspension components must be kept clean and move freely without binding to prevent poor and/or inconsistent handling.

## :: Tuning Tips - Rear Arm Mount Pill Insert Setups

**Standard Position**

Use this position as a reference when changing pill locations.

Toe: 3°
Anti-Squat: 1°
Roll Center: +0
Pin Width: +0

**C Mount**

**D Mount**

**Possible Insert Locations**

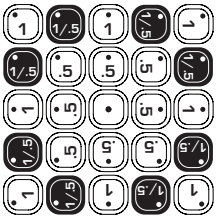

**Insert Hole Locations**

Number indicates degree of change: 0.5°,1.0°, 0° (center dot)

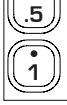

Hole 0.5° or 0.35mm from center

Hole 1.0° or 0.7mm from center

**Pin Width**

More distance = wider pivot
Less distance = narrower pivot

C Mount | D Mount

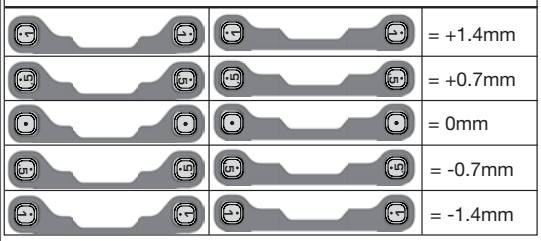

= +1.4mm
= +0.7mm
= 0mm
= -0.7mm
= -1.4mm

**Pin Height**

Higher pin = Higher roll center
Lower Pin = Lower roll center

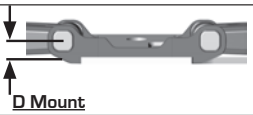

C Mount | D Mount

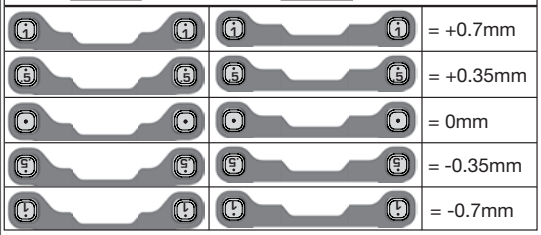

= +0.7mm
= +0.35mm
= 0mm
= -0.35mm
= -0.7mm

**Anti-Squat Angle**

More angle = More anti-squat
Less angle = Less anti-squat

Shown in 1° changes

C Mount | D Mount

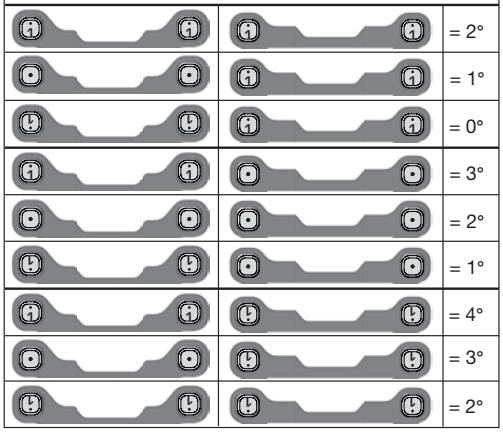

= 2°
= 1°
= 0°
= 3°
= 2°
= 1°
= 4°
= 3°
= 2°

**Toe Angle**

More angle = More toe in
Less angle = Less toe in
Shown in 1° changes

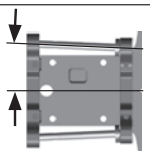

C Mount | D Mount

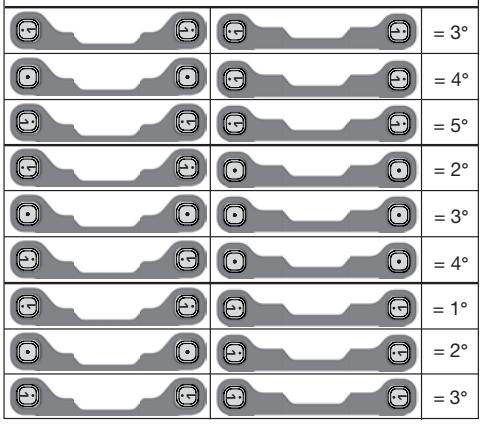

= 3°
= 4°
= 5°
= 2°
= 3°
= 4°
= 1°
= 2°
= 3°

## :: Tuning Tips

### Trailing Axle:

A trailing axle is the distance from the king pin to the axle that "trails" behind the pin. The standard setup uses a 4mm trailing axle steering block for the most stable handling. Try the 3mm trailing axle steering block for more corner entry steering.

## :: Tuning Tips

### Front Camber Links:

Changing the length of the camber link is considered a bigger step than adjusting the ball end height on the tower. Shortening the camber link (or lowering the ball end) will give the front end less roll and quicken steering response. Lengthening the camber link (or raising the ball end) will give the front more roll and slower steering response. Longer camber links are typically used on high grip tracks and shorter links tend to work better on medium-grip loose tracks.

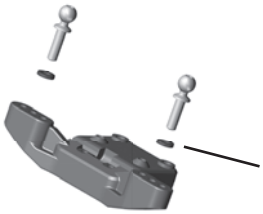

*Raise or lower the ball end by adding or removing washers here

### Rear Camber Link:

Changing the length of the camber link is considered a bigger step than adjusting the ball end height on the rear chassis brace. Shortening the camber link (or lowering the ball end) will give the rear end less roll and the car will tend to accelerate or "square up" better. Lengthening the camber link (or raising the ball end) will give the rear more roll and more cornering grip. Longer camber links are typically used on high grip tracks, while shorter links tend to work better on medium grip loose tracks.
The kit setting is the best compromise of cornering grip and acceleration.

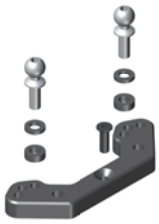

*Raise or lower the ball end by adding or removing washers here

### Ackermann:

Ackermann is the angle difference between the front wheels when they are turned to steer the car. For minimal tire slip, it is standard for the inside wheel to steer to a greater angle than the outside wheel. The kit allows Ackermann adjustments by changing the washer thickness used behind the steering rack ballstuds. The kit setup uses 2mm washers and is most common for racing conditions. If corner entry steering is too aggressive, try increasing the Ackermann by removing shims from behind the steering rack ballstuds. Increasing the Ackermann will increase the angle difference of the front wheels when steered, resulting in a more stable car on corner entry.

### Kickup:

Kickup is the angle the front suspension arm mounts at where the front of the arm is higher than the rear.
The standard kickup angle for the B6 is 25°, and is most common. If more corner entry steering is desired, try switching to the 30° front bulkhead setting.

### Axle Height:

Axle height is used to keep roll centers similar when large ride height changes are made. As a rule of thumb, high axle heights are used for lower ride heights (< 20mm) and low axle heights are used for higher (> 22mm) ride heights. The idea is to keep the arms close to level at ride height.

### Ride Height:

Ride height is the distance from the ground to the bottom of the chassis.
The standard front ride height setting is 19mm (Ride Height Gauge #1449). Check the front ride height by lifting up the entire car about 8-12 inches off the bench and dropping it. After the suspension "settles" into place, measure ride height (Ride Height Gauge #1449). Raise or lower the shock collars as necessary.

The rear ride height setting you should use most often is 19mm (Ride Height Gauge#1449). Check the rear ride height by lifting up the entire car about 8-12 inches off the bench and drop it. After the suspension "settles" into place, measure ride height (Ride Height Gauge #1449). Raise or lower the shock collars as necessary.

### Wheelbase Adjustment:

You have three options for rear hub spacing; forward, middle, & back. The kit setting of middle is the most neutral, and will be used most often. For improved handling in bumps or rhythm sections, try moving the hubs to the back position. Hub forward is typically used on low grip or where there are lots of tight corners.

*Spacers to the rear will place hubs forward, shortening the wheelbase

### Anti-Roll Bars:

The anti-roll bar kits (also called the "swaybar") allows you to add roll resistance to the front and /or rear end with minimal effect on handling over bumps and jumps. It is an especially helpful tuning item on high-grip tracks.

### Shock Mounting Position:

The rear shocks can be mounted on the front or rear of the rear suspension arm. Mounting the shocks on the front of the arm reduces rear weight bias. This causes the car to turn quicker and also steer more on-power. Usually this is used on high bite tracks in order to keep the car steering while applying throttle. Mounting the shocks on the rear of the arm increases rear weight bias and keeps the rear end planted while making the steering radius larger.
This setting is typically easier to drive and will produce more rear traction.

## :: Tuning Tips (cont.)

### Motor Gearing:

Proper motor gearing will result in maximum performance and run time while reducing the chance of overheating and premature motor failure. The gear ratio chart lists recommended starting gear ratios for the most widely used motor types. Gear ratios will vary depending upon motor brand, wind, and electronic speed control. Consult your motor and electronic speed control manufacturers for more information.
Team Associated is not responsible for motor damage due to improper gearing.

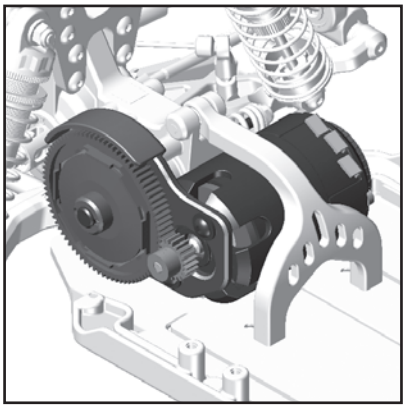

**SC6.2 Gear Ratio Chart (Internal Gear Ratio 2.60:1)**

| Motor | Pinion | Spur | Final Drive Ratio |
|---|---|---|---|
| 17.5 Reedy S-Plus Brushless | 24 | 81 | 8.78:1 |
| 13.5 Reedy S-Plus Brushless | 23 | 81 | 9.16:1 |
| 10.5 Reedy 540-M3 Brushless | 22 | 81 | 9.57:1 |
| 9.5 Reedy 540-M3 Brushless | 21 | 81 | 10.03:1 |
| 8.5 Reedy 540-M3 Brushless | 20 | 81 | 10.53:1 |
| 7.5 Reedy 540-M3 Brushless | 19 | 81 | 11.08:1 |
| 6.5 Reedy 540-M3 Brushless | 18 | 81 | 11.70:1 |

### Set The Gear Mesh:

You should be able to rock the spur gear back and forth in the teeth of the pinion gear without making the pinion gear move. If the spur gear mesh is tight, then loosen the #31532 screws and move the motor away, then try again.
A gear mesh that is too tight or too loose will reduce power and damage the gear teeth.

### Diff Height Adjustment:

The diff height adjustment is a good way to tune the car for grip level. On high grip tracks and low chassis ride heights, setting your diff higher will be a good option. On lower grip tracks with higher chassis ride heights, setting your diff lower will be a better option.

### Gear Box Type:

Selecting the correct gear box is dependent on the type of track it will be used on.

1) The lay-down gear box is used on high grip conditions when on-power steering and stability are most important.
This gear box will change directions the quickest and generate the most steering.
2) The layback gear box is used for most indoor clay track conditions.

### Slipper Clutch:

The assembly instructions give you a base setting for your clutch. Turn the nut on the top shaft screw so that the end of the top shaft screw is even with the outside of the nut. At the track, tighten or loosen the nut in 1/8 turn increments until you hear a faint slipping sound for 1-2 feet on takeoffs. Another popular way to set the clutch is to hold both rear tires firmly in place and apply short bursts of throttle. If the clutch is properly set, the front tires should lift slightly up off the surface.

### Caster:

Caster describes the angle of the caster block as it leans toward the rear of the vehicle. Positive caster means the kingpin leans rearward at the top. The kit includes three inserts to adjust caster angle at the caster block, 0°, 2.5°, and +5°. The total caster angle is the sum of the kick-up angle and the caster block angle. Standard total caster angle for the B6 is 30°. That is achieved with a 25° kick-up and a +5° caster block angle.
For less entry steering and more exit steering, try 0° caster block angle.

### Front Camber:

Camber describes the angle at which the tire and wheel rides when looked at from the front. Negative camber means that the tire leans inward at the top. A good starting camber setting is -1°. Positive camber, where the top of the tire is leaning out, is not recommended.
Optional #1719 camber gauge can be used to more accurately set camber.

*Testing camber with camber gauge

### Rear Camber:

Camber describes the angle at which the tire and wheel rides when looked at from the back. Negative camber means that the tire leans inward at the top. A good starting camber setting is -1°. Adding a small amount of positive camber, where the top of the tire is leaning out, will tend to improve straight-line acceleration on loose tracks.
Optional #1719 camber gauge can be used to more accurately set camber.

## :: Shocks

| | | |
|---|---|---|
| 4187 | .030 Nylon Washer | 12 |
| 31327 | VCS3 Shock Bottom Cap and O-Ring | 2 ea. |
| 31510 | 2x4mm BHCS | 6 |
| 89278 | 2.6x6mm Washer | 20 |
| 91304 | 12MM Threaded Collar and O-Ring | 2 |
| 91481 | 12x27.5MM V2 Shock Bodies | 2 |
| 91483 | 12x36MM V2 Shock Bodies | 2 |
| 91491 | 12MM V2 Shock Rebuild Kit | 1 |
| 91492 | M2 x 4mm BHCS with Washer | 2 |
| 91493 | FT Low Friction X-Rings | 8 |
| 91495 | 12 mm V2 X-Ring Rebuild Kit | 1 |
| 91619 | 3 x 27.5mm Shock Shaft (V2), TiN | 2 |
| 91623 | 3 x 35mm Shock Shaft (V2), TiN | 2 |
| 91626 | FT 12mm Pistons (V2), 2x1.6 mm, flat | 4 |
| 91627 | FT 12mm Pistons (V2), 2x1.7 mm, flat | 4 |
| 91814 | B6.1 Shock Caps/Spring Cups | 4 ea. |
| 91819 | B6.1 Shock Pivot Balls | 4 |
| 91820 | B6.1 Ball Ends | 1 |

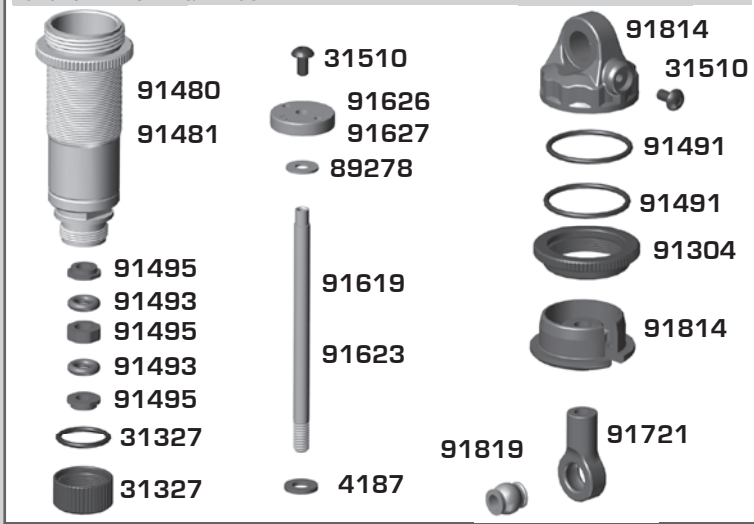


## :: FT Options - Shocks

| | | |
|---|---|---|
| 91493 | FT Low Friction X-Rings | 4 |
| 91494 | FT 12 mm Machined Shock Spacers, V2 | 1 |
| 91495 | FT 12mm V2 X-Ring Rebuild Kit | 1 |
| 91577 | FT 12x27.5 mm FOX(R) Shock Bodies with Genuine Kashima Coat, V2, threaded | 2 |
| 91579 | FT 12x36mm FOX(R) Shock Bodies with Genuine Kashima Coat, V2, threaded | 2 |
| 91620 | FT 3x27.5mm V2 Shock Shaft, Chrome | 2 |
| 91621 | FT 12mm Pistons, V2, 2x1.6, Thin | 4 |
| 91622 | FT 12mm Pistons, V2, 2x1.7, Thin | 4 |
| 91624 | FT 3x35mm V2 Shock Shaft, Chrome | 2 |

## :: Shock Fluid

| | | |
|---|---|---|
| 5420 | 10 Weight Silicone Shock Fluid | 2oz. |
| 5421 | 20 Weight Silicone Shock Fluid | 2oz. |
| 5422 | 30 Weight Silicone Shock Fluid | 2oz. |
| 5423 | 40 Weight Silicone Shock Fluid | 2oz. |
| 5424 | 22.5 Weight Silicone Shock Fluid | 2oz. |
| 5425 | 80 Weight Silicone Shock Fluid | 2oz. |
| 5426 | 27.5 Weight Silicone Shock Fluid | 2oz. |
| 5427 | 15 Weight Silicone Shock Fluid | 2oz. |
| 5428 | 25 Weight Silicone Shock Fluid | 2oz. |
| 5429 | 35 Weight Silicone Shock Fluid | 2oz. |
| 5430 | 45 Weight Silicone Shock Fluid | 2oz. |
| 5431 | 55 Weight Silicone Shock Fluid | 2oz. |
| 5432 | 32.5 Weight Silicone Shock Fluid | 2oz. |
| 5433 | 37.5 Weight Silicone Shock Fluid | 2oz. |
| 5434 | 42.5 Weight Silicone Shock Fluid | 2oz. |
| 5435 | 50 Weight Silicone Shock Fluid | 2oz. |
| 5436 | 60 Weight Silicone Shock Fluid | 2oz. |
| 5437 | 70 Weight Silicone Shock Fluid | 2oz. |
| 5438 | 47.5 Weight Silicone Shock Fluid | 2oz. |


## :: Springs

| | | |
|---|---|---|
| 91635 | Front Shock Spring, 54mm, Green 3.75lbs | 2 |
| 91636 | Front Shock Spring, 54mm, White 4.10lbs | 2 |
| 91637 | Front Shock Spring, 54mm, Gray 4.45lbs - KIT | 2 |
| 91639 | Rear Shock Spring, 72mm, Green 2.20lbs | 2 |
| 91640 | Rear Shock Spring, 72mm, White 2.40lbs - KIT | 2 |
| 91641 | Rear Shock Spring, 72mm, Gray 2.60lbs | 2 |

## :: Ball Differential

| | | |
|---|---|---|
| 1733 | Diff Shims | 8 |
| 6573 | Diff Thrust Washer & Bolt | 2 |
| 6574 | Precision Diff Thrust Balls, 5/64” | 6 |
| 6575 | Locking T-Nut, Diff Thrust Bolt, & Cover | 1 |
| 6581 | 3/32” Carbide Diff Balls | 12 |
| 6582 | Diff Thrust Spring | 1 |
| 7666 | Diff Drive Rings, 2.60:1 | 2 |
| 7677 | Ball Diff Rebuild Kit | 1 |
| 31400 | Bearing, 5 x 8mm | 2 |
| 91419 | Diff Gear, B5 | 1 |
| 91701 | Ball Diff Outdrive, B6 | 1 ea. |
| 91702 | Ball Diff Kit, B6 | 1 |

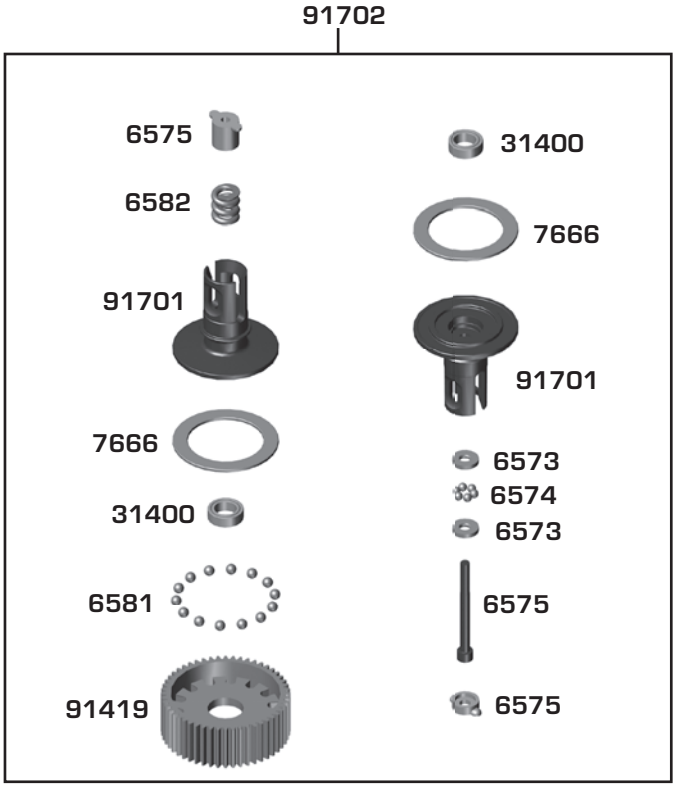


## :: Differential Fluid

| | | |
|---|---|---|
| 5450 | Silicone Diff Fluid 1,000CST | 2oz. |
| 5451 | Silicone Diff Fluid 2,000CST | 2oz. |
| 5452 | Silicone Diff Fluid 3,000CST | 2oz. |
| 5444 | Silicone Diff Fluid 4,000CST | 2oz. |
| 5453 | Silicone Diff Fluid 5,000CST | 2oz. |
| 5446 | Silicone Diff Fluid 6,000CST | 2oz. |
| 5454 | Silicone Diff Fluid 7,000CST | 2oz. |
| 5455 | Silicone Diff Fluid 10,000CST | 2oz. |
| 5447 | Silicone Diff Fluid 15,000CST | 2oz. |
| 5456 | Silicone Diff Fluid 20,000CST | 2oz. |
| 5457 | Silicone Diff Fluid 30,000CST | 2oz. |
| 5458 | Silicone Diff Fluid 60,000CST | 2oz. |
| 5448 | Silicone Diff Fluid 80,000CST | 2oz. |
| 5459 | Silicone Diff Fluid 100,000CST | 2oz. |
| 5461 | Silicone Diff Fluid 200,000CST | 2oz. |
| 5463 | Silicone Diff Fluid 500,000CST | 2oz. |
| 5465 | Silicone Diff Fluid 1,000,000CST | 2oz. |

## :: Transmission

| | | |
|---|---|---|
| 25188 | M3 x 20mm BHCS | 10 |
| 25202 | M3 x 10mm FHCS | 10 |
| 25204 | M3 x 16mm FHCS | 10 |
| 31383 | Ballstud Washers, 5.5x2.0 mm, blue aluminum | 10 |
| 31448 | M2.5 x 8mm FHCS | 10 |
| 31532 | M3 x 8mm BHCS | 10 |
| 89202 | M3 x 12mm BHCS | 10 |
| 89203 | M3 x 16mm BHCS | 10 |
| 89218 | M3 x 8mm Washers | 10 |
| 91048 | Heavy-duty Ballstuds, 8 mm | 10 |
| 91132 | 4x4 FT Idler Shafts, aluminum | 2 |
| 91560 | FT Bearings, 5x10x4 mm | 4 |
| 91709 | B6 Chassis Braces | 1 ea. |
| 91717 | B6 Idler Gear, 26T, standup | 2 |
| 91775 | B6.1 Rear Ballstud Mount | 1 |
| 91790 | B6.1 Layback Gearbox | 1 |
| 91795 | B6.1 Laydown Motor Plate | 1 |
| 91799 | B6.1 Laydown Top Shaft | 1 |
| 91813 | B6.1 Gear Cover | 1 |
| 91819 | B6.1 Shock Pivot Balls | 4 |

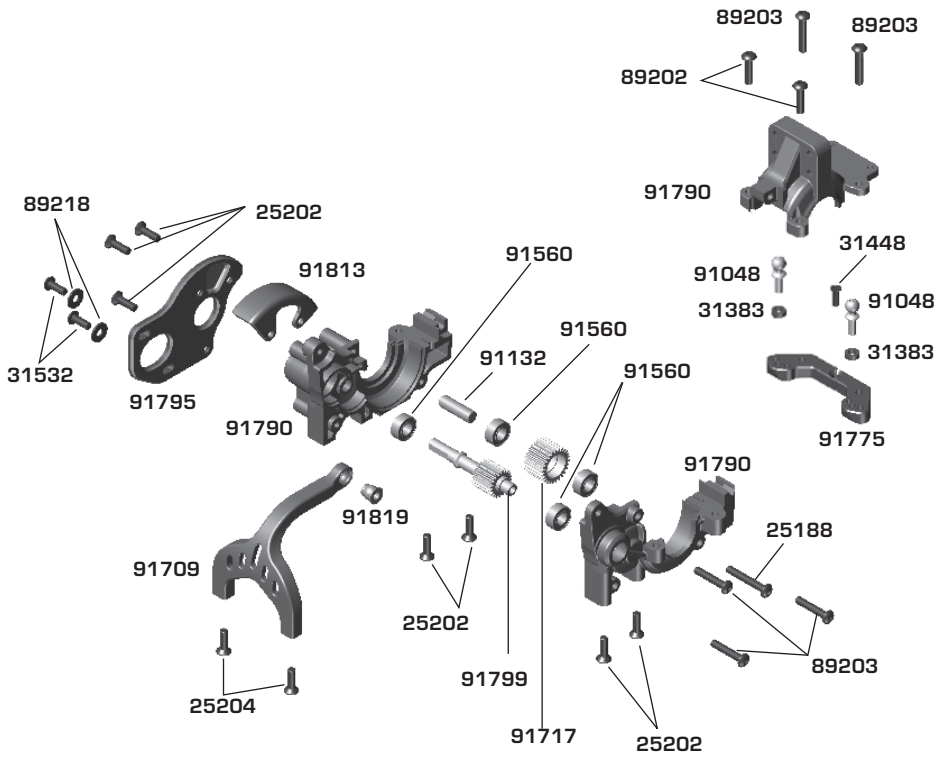


## :: Slipper Clutch

| | | |
|---|---|---|
| 25612 | Locknuts, M3, Flanged | 10 |
| 91799 | B6.1 Laydown Top Shaft | 1 |
| 91801 | B6.1 Slipper Spring and Adaptors | 1 |
| 91803 | B6.1 Slipper Hub, Inner | 1 |
| 91804 | B6.1 Slipper Hub, Outer | 1 |
| 91805 | B6.1 HTC Slipper Hub Outer | 1 |
| 92286 | Octalock LCF Slipper Pad, 19mm | 2 |
| 92288 | Octalock Slipper Pad, 19mm | 2 |
| 92293 | Octalock Spur Gear, 72T, 48P | 1 |
| 92294 | Octalock Spur Gear, 75T, 48P | 1 |
| 92295 | Octalock Spur Gear, 78T, 48P | 1 |
| 92296 | Octalock Spur Gear, 81T, 48P | 1 |


## :: Pinion Gears

| | | |
|---|---|---|
| 1335 | 17T 48P Aluminum Pinion Gear | 1 |
| 1336 | 18T 48P Aluminum Pinion Gear | 1 |
| 1337 | 19T 48P Aluminum Pinion Gear | 1 |
| 1338 | 20T 48P Aluminum Pinion Gear | 1 |
| 1339 | 21T 48P Aluminum Pinion Gear | 1 |
| 1340 | 22T 48P Aluminum Pinion Gear | 1 |
| 1341 | 23T 48P Aluminum Pinion Gear | 1 |
| 1342 | 24T 48P Aluminum Pinion Gear | 1 |
| 1343 | 25T 48P Aluminum Pinion Gear | 1 |
| 1344 | 26T 48P Aluminum Pinion Gear | 1 |
| 1345 | 27T 48P Aluminum Pinion Gear | 1 |
| 1346 | 28T 48P Aluminum Pinion Gear | 1 |
| 1347 | 29T 48P Aluminum Pinion Gear | 1 |
| 1348 | 30T 48P Aluminum Pinion Gear | 1 |
| 1349 | 31T 48P Aluminum Pinion Gear | 1 |
| 1350 | 32T 48P Aluminum Pinion Gear | 1 |
| 1351 | 33T 48P Aluminum Pinion Gear | 1 |
| 1352 | 34T 48P Aluminum Pinion Gear | 1 |
| 1353 | 35T 48P Aluminum Pinion Gear | 1 |
| 25225 | M3 x 3mm Set Screw | 20 |

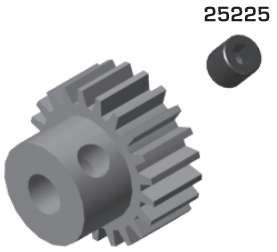

## :: Optional Gear Differential

| | | |
|---|---|---|
| 31522 | M2.5 x 10mm BHCS | 10 |
| 91563 | FT Bearings, 10x15x4 mm | 4 |
| 91780 | B6.1 Gear Differential Rebuild | 1 |
| 91782 | B6.1 Gear Differential Seals | 1 |
| 91783 | B6.1 Gear Differential Case | 1 |
| 91784 | B6.1 Aluminum Cross Pins | 2 |
| 91785 | B6.1 Gear Differential Outdrives | 2 |
| 91786 | B6.1 Gear Differential | 1 |
| 91792 | B6.1 Differential Height Inserts | 2 ea. |
| 5450 | Silicone Diff Fluid 1,000CST | 1 |
| 5451 | Silicone Diff Fluid 2,000CST | 1 |
| 5452 | Silicone Diff Fluid 3,000CST | 1 |
| 5444 | Silicone Diff Fluid 4,000CST | 1 |
| 5453 | Silicone Diff Fluid 5,000CST | 1 |
| 5446 | Silicone Diff Fluid 6,000CST | 1 |
| 5454 | Silicone Diff Fluid 7,000CST | 1 |
| 5455 | Silicone Diff Fluid 10,000CST | 1 |
| 5447 | Silicone Diff Fluid 15,000CST | 1 |
| 5456 | Silicone Diff Fluid 20,000CST | 1 |
| 5457 | Silicone Diff Fluid 30,000CST | 1 |
| 5458 | Silicone Diff Fluid 60,000CST | 1 |
| 5448 | Silicone Diff Fluid 80,000CST | 1 |
| 5459 | Silicone Diff Fluid 100,000CST | 1 |
| 5461 | Silicone Diff Fluid 200,000CST | 1 |
| 5463 | Silicone Diff Fluid 500,000CST | 1 |
| 5465 | Silicone Diff Fluid 1,000,000CST | 1 |

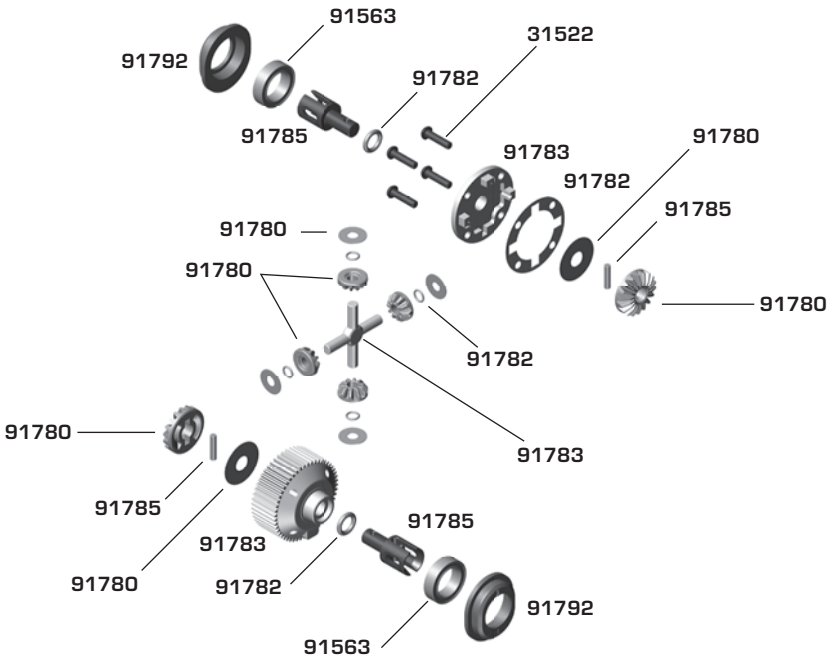


## :: Turnbuckles and Servo Mounts

| | | |
|---|---|---|
| 4671 | M3 x 10mm Set Screw | 6 |
| 7253 | Turnbuckles, 67mm (2.62”), Steel | 2 |
| 9175 | Turnbuckles, 58mm | 2 |
| 25211 | M3 x 10mm BHCS | 20 |
| 31284 | Ball Studs Long, 8mm | 6 |
| 31382 | FT Ballstud Washer, aluminum1mm | 10 |
| 31532 | M3 x 8mm BHCS | 6 |
| 89218 | M3 x 8mm Washers | 10 |
| 91719 | Servo Mount, B6 | 2 |
| 91722 | Ball Cups, B6 | 12 |
| 91728 | B6 Servo Horns, 15.5 mm | 1 |
| 91820 | B6.1 Ball Ends | 1 |


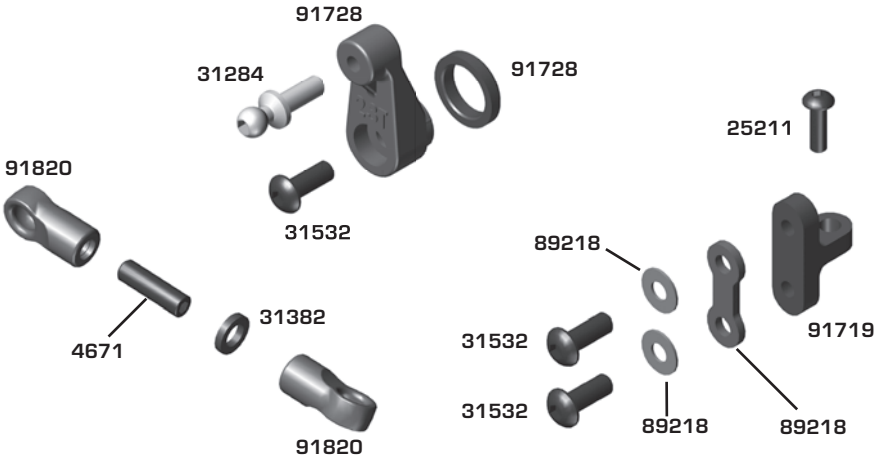


## :: Battery Strap

| | | |
|---|---|---|
| 31531 | M3 x 6mm BHCS | 10 |
| 89218 | 3 x 8mm Washers | 10 |
| 91729 | Thumb Screw, B6 | 2 |
| 91730 | Battery Strap Shoulder Screw | 2 |
| 91731 | Battery Strap, B6 | 1 |

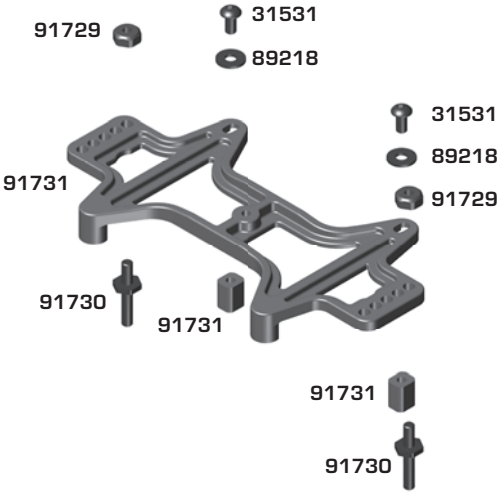

## :: Front Arm

| | | |
|---|---|---|
| 25187 | M3 x 14mm BHCS | 10 |
| 25188 | M3 x 20mm BHCS | 10 |
| 25215 | M3 Locknut, Black | 10 |
| 31382 | FT Ballstud Washer, aluminum1mm | 10 |
| 31510 | M2 x 4mm BHCS | 6 |
| 31531 | M3 x 6mm, BHCS | 6 |
| 31532 | M3 x 8mm, BHCS | 6 |
| 71103 | T6.1 Front Arms | Pr. |
| 71111 | T6.1 Front Axle, 8.50mm | 2 |
| 91048 | Heavy-duty Ballstud, 8mm | 8 |
| 91049 | Heavy-duty Ballstud, 10mm | 8 |
| 91560 | FT Bearing, 5 x 10 x 4 | 4 |
| 91670 | Hinge Pin Set, B6 | 1 |
| 91676 | B6 Caster Hat Bushings | 2 ea. |
| 91679 | B6 Steering Block Arms | 2 |
| 91776 | B6.1 Caster/Steering Blocks | 1 |
| 91826 | M4 Serrated Wheel Nut, Steel (Silver) | 10 |

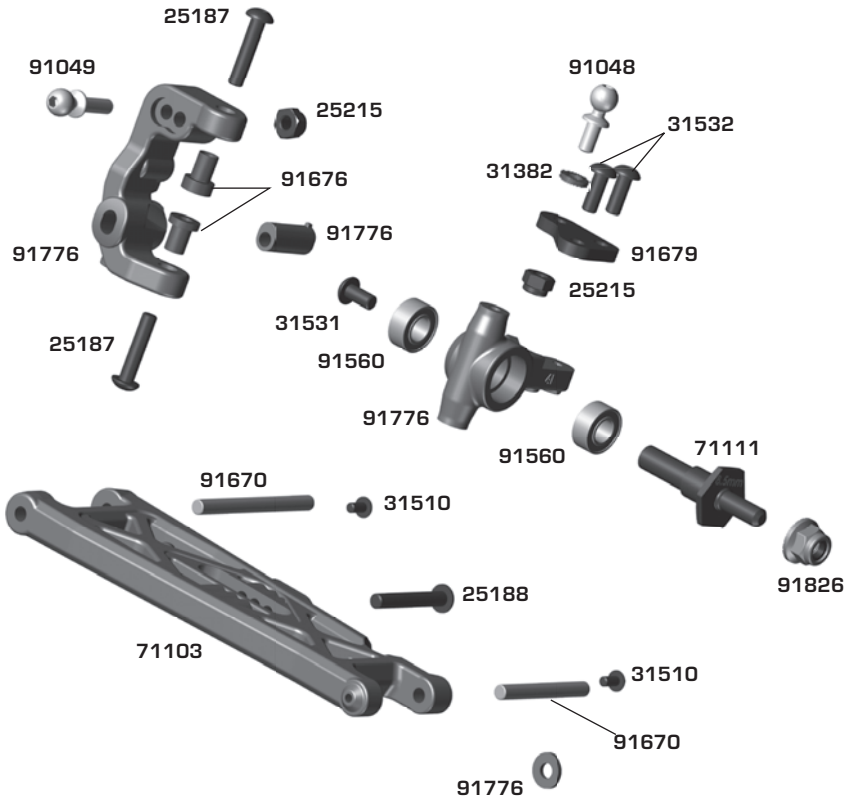


## :: Rear Arm

| | | |
|---|---|---|
| 25187 | M3 x 14mm BHCS | 10 |
| 25215 | M3 Locknut, Black | 10 |
| 31383 | Ballstud Washers, 5.5x3x2mm | 10 |
| 31510 | M2 x 4mm BHCS | 6 |
| 71105 | T6.1 Rear Suspension Arm | Pr. |
| 71014 | FT Clamping Wheel Hexes, 8.5mm | 2 |
| 71113 | T6.1 CVA Bone (91mm) | 2 |
| 89202 | M3 x 12mm BHCS | 10 |
| 91047 | Heavy-duty Ballstud, 6mm | 8 |
| 91150 | M4 LP Flanged Serrated Nut, Steel | 10 |
| 91436 | CVA/Wheel Hex Pin, B5 | 4 |
| 91438 | CVA Rebuild Kit, B5 | 1 |
| 91563 | FT Bearing, 10 x 15 x 4 | 4 |
| 91567 | FT Bearing, 5 x 12 x 4 | 4 |
| 91611 | M1.6 x 5mm SHCS | 4 |
| 91670 | Hinge Pin Set, B6 | 1 |
| 92179 | Rear Hub Insert Set | 1 |
| 92180 | Rear Hub Link Mounts | 2 |
| 92267 | B74.1 Rear Hub | Pr. |

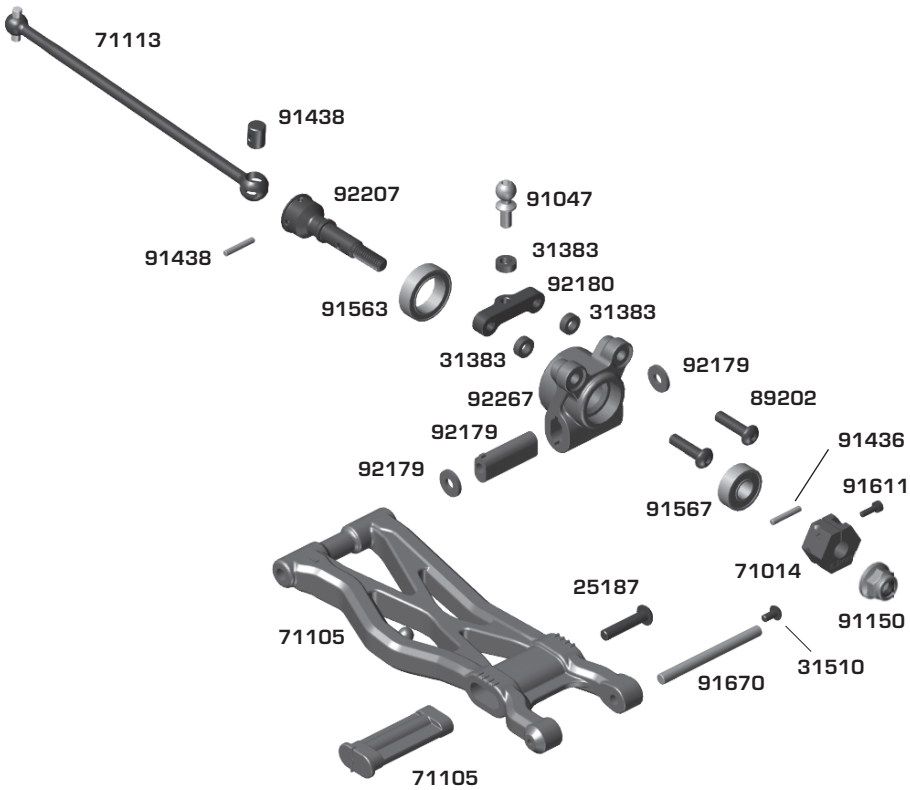

## :: Front Shock Tower

| | | |
|---|---|---|
| 25189 | M3 x 22mm BHCS | 10 |
| 25203 | M3 x 12mm FHCS | 10 |
| 25612 | M3 Locknuts w/Flange | 10 |
| 31532 | M3 x 8mm BHCS | 10 |
| 71032 | M2.5 x 14mm SHCS | 10 |
| 71115 | T6.1 Front Shock Tower | 1 |
| 71123 | SC6.1 Body Mounts | 1 |
| 91815 | Shock Bushing, 10mm | 4 |

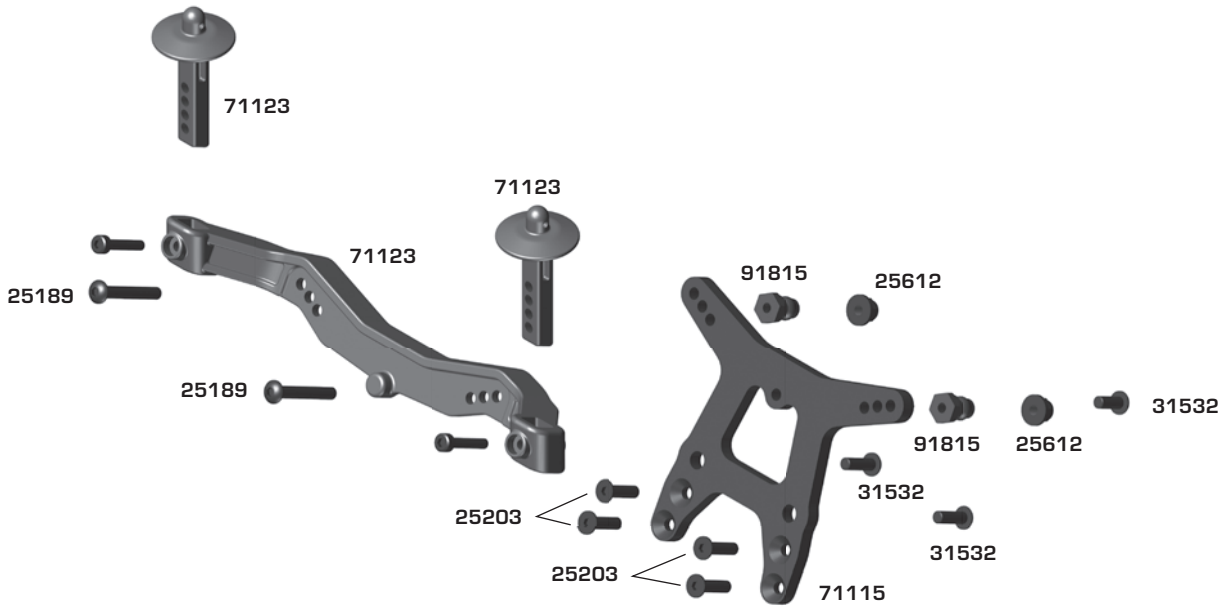


## :: Rear Shock Tower

| | | |
|---|---|---|
| 25187 | M3 x 14mm BHCS | 10 |
| 25189 | M3 x 22mm BHCS | 10 |
| 25211 | M3 x 10mm BHCS | 10 |
| 25612 | M3 Locknuts w/Flange | 10 |
| 31448 | M2.5 x 8mm FHCS | 10 |
| 71032 | M2.5 x 14mm SHCS | 10 |
| 71123 | SC6.1 Body Mounts | 1 |
| 71148 | SC6.2 Rear Shock Tower | 1 |
| 89202 | M3 x 12mm BHCS | 10 |
| 91816 | Shock Bushing, 12mm | 4 |

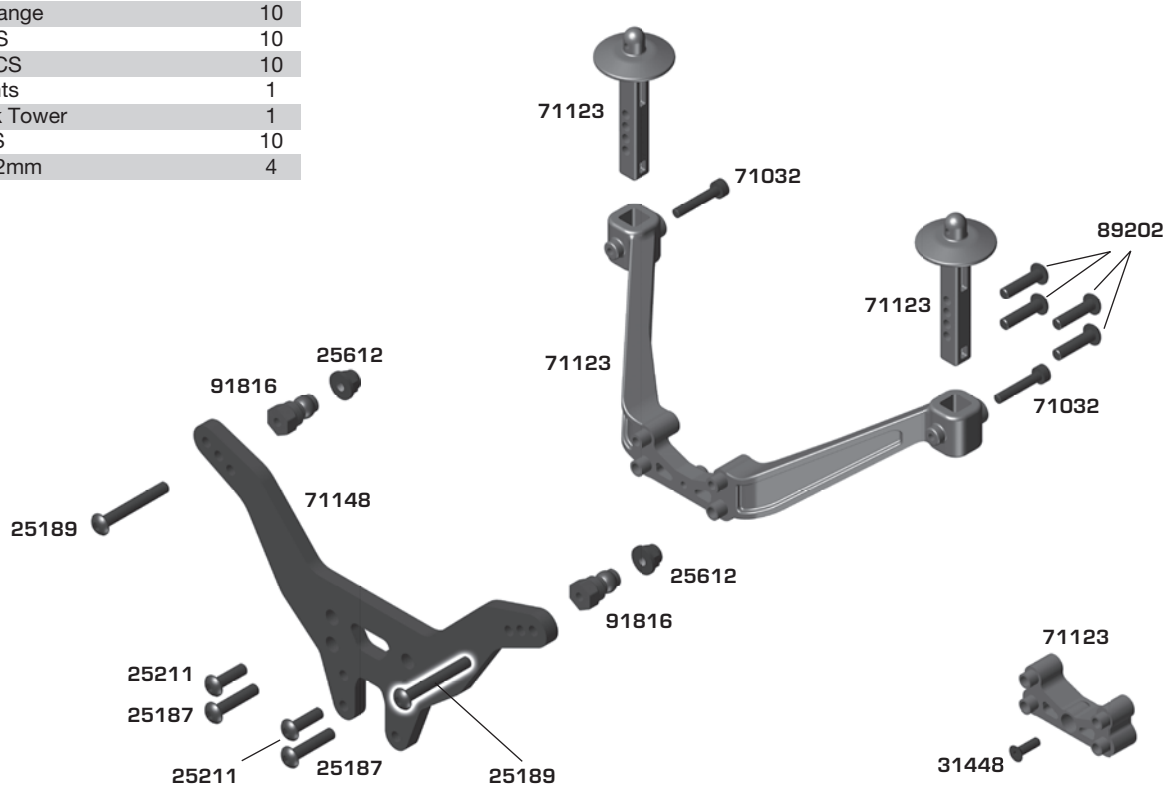

## :: Front and Rear Bumpers

| | | |
|---|---|---|
| 25187 | M3 x 14mm BHCS | 10 |
| 25211 | M3 x 10mm BHCS | 10 |
| 25215 | M3 Locknut, Black | 10 |
| 71037 | M3 x 45mm BHCS | 10 |
| 71124 | SC6.1 Front Bumper & Nerf Bars | 1 |
| 71125 | SC6.1 Rear Bumper | 1 |

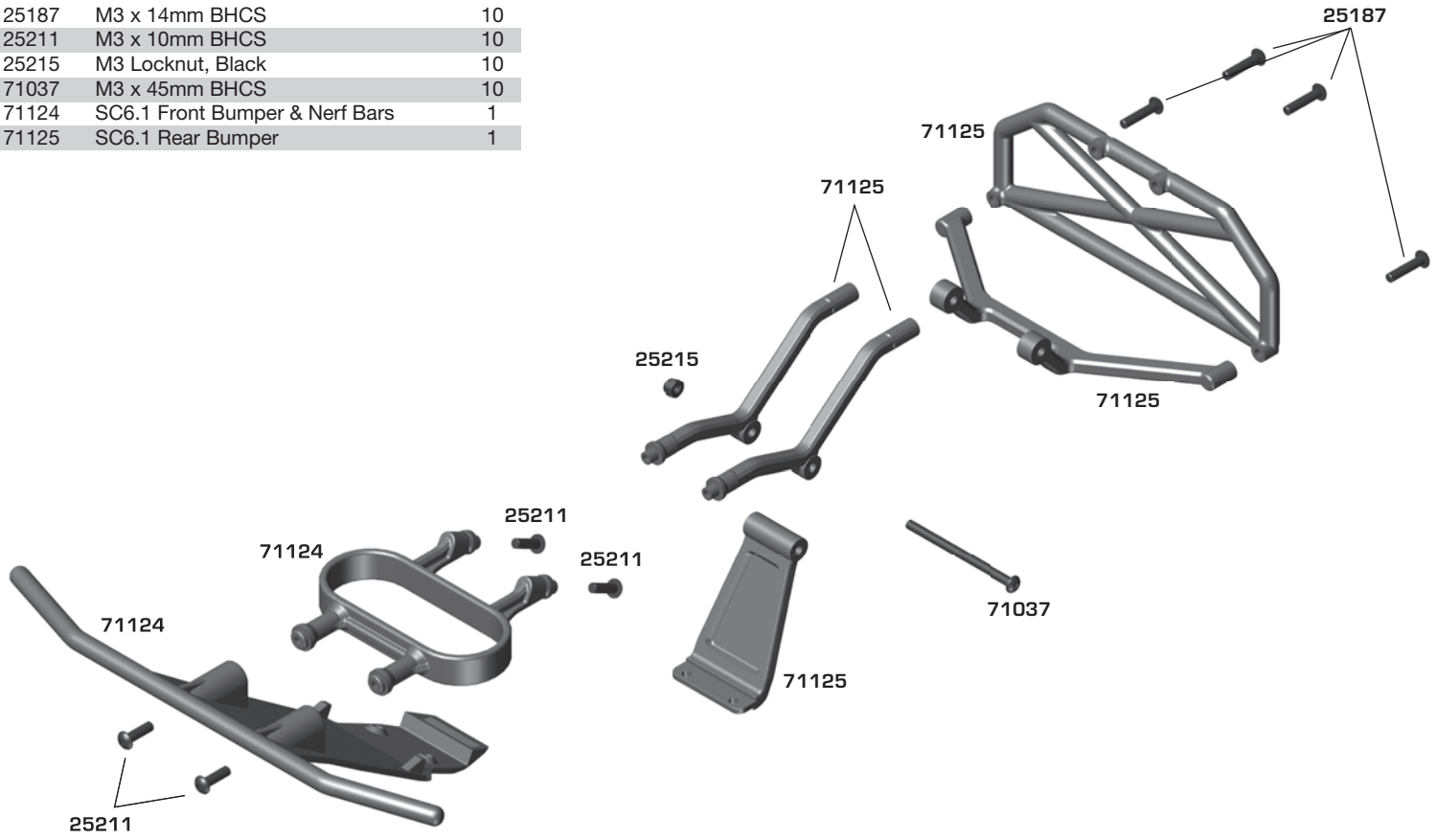


## :: Front Bulkhead / Steering

| | | |
|---|---|---|
| 25187 | M3 x 14mm BHCS | 10 |
| 25204 | M3 x 16mm FHCS | 10 |
| 25211 | M3 x 10mm BHCS | 10 |
| 25225 | M3 x 3mm Set Screw | 10 |
| 31283 | Ball Studs, Long, 5mm | 6 |
| 31382 | Ballstud Washers, 5.5x1.0 mm, blue aluminum | 10 |
| 89202 | M3 x 12mm BHCS | 8 |
| 91048 | Heavy-duty Ballstud, 8mm | 8 |
| 91049 | Heavy-duty Ballstud, 10mm | 8 |
| 91475 | 3x7x3 Ball Bearing | 1 |
| 91656 | Bulkhead, B6 | 1 |
| 91657 | Front Hinge Pin Brace | 1 |
| 91667 | Steering Assembly, B6 | 1 |
| 91678 | M3 x 20mm BHCS, Shouldered | 10 |
| 91766 | B6.1 Top Plate, Ballstud Mount | 1 ea. |

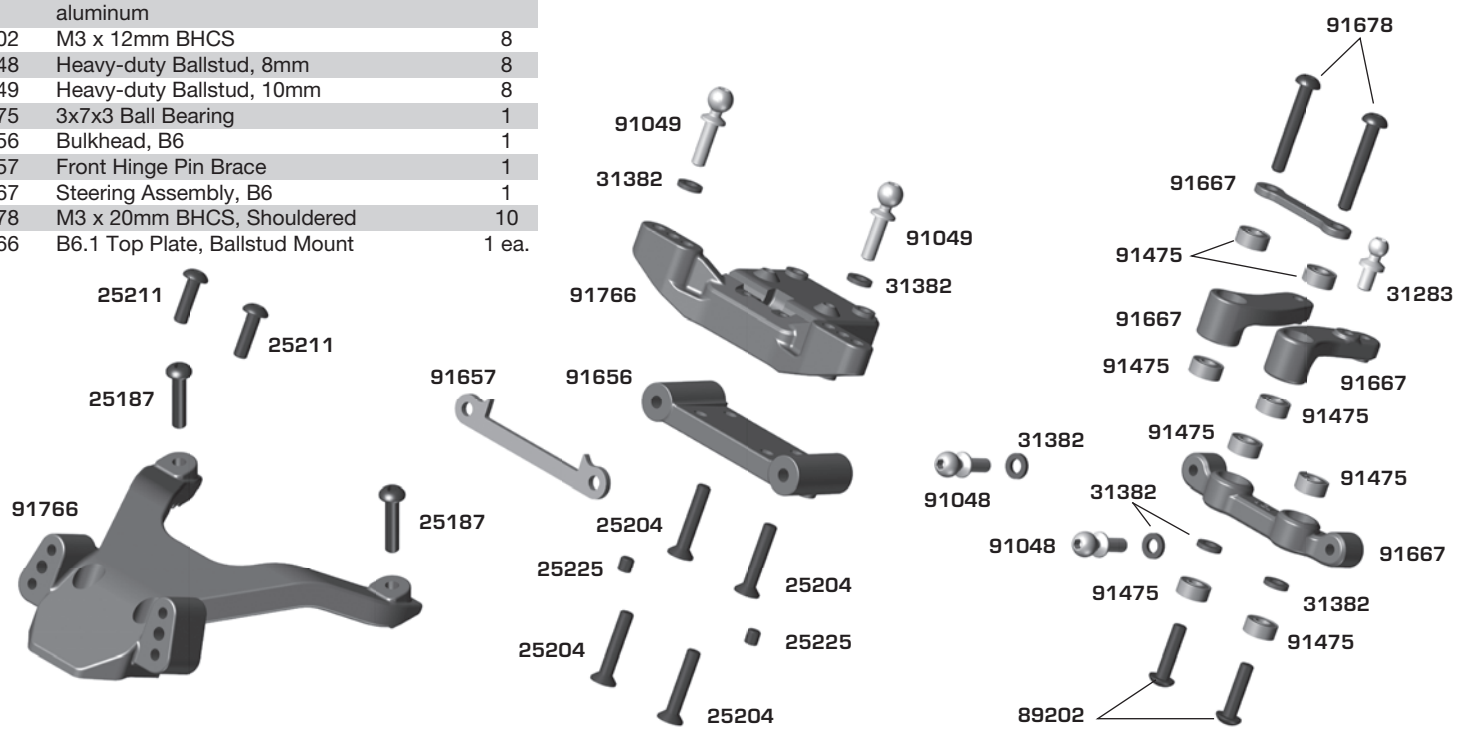

## :: Wheels / Tires

| | | |
|---|---|---|
| 71040 | Method 12mm Hex Wheel, Black | 2 |
| 71058 | Multi-Terrain Tire w/Inserts | 2 |

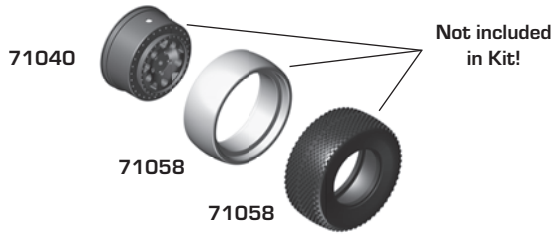


## :: Anti-Roll Bar

| | | |
|---|---|---|
| 25225 | M3 x 3mm Set Screws | 10 |
| 31500 | M3 x 2.5mm Set Screws | 10 |
| 31520 | M2.5 x 6mm BHCS | 10 |
| 71128 | T6.1 Front Anti-Roll Bar | 1 |
| 71129 | Rear Anti-Roll Bar Set | 1 |
| 91820 | Front Anti-Roll Bar Link | 2 |
| 91821 | Anti-Roll Bar Hardware Set | 2 |

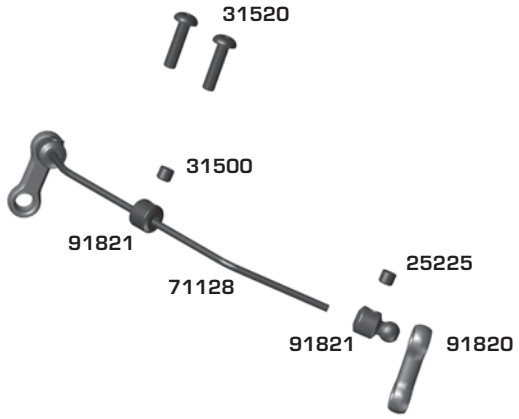


## :: Chassis

| | | |
|---|---|---|
| 6338 | Antenna Tube & Cap (black) | 1 |
| 25201 | M3 x 8mm FHCS | 20 |
| 25202 | M3 x 10mm FHCS | 20 |
| 25204 | M3 x 16mm FHCS | 20 |
| 25225 | M3 x 3mm Set Screw | 20 |
| 31532 | M3 x 8mm BHCS | 10 |
| 31541 | M3 x 6mm FHCS | 10 |
| 71120 | SC6.1 Chassis | 1 |
| 71121 | SC6.1 Side Rails | Pr. |
| 71124 | SC6.1 Nerf Bars | Pr. |
| 89203 | M3 x 16mm BHCS | 10 |
| 91670 | Hinge Pin Set, B6 | 1 |
| 91688 | Aluminum Arm Mount (D), B6 | 1 |
| 91772 | B6.1 Aluminum Arm Mount (C) | 1 |
| 91734 | Battery Foam, B6 | 1 |
| 91746 | Chassis Weight, Aluminum, 13g | 1 |
| 91749 | M2 x 3mm FHCS | 6 |
| 91867 | B6.2 Fan Mount | 1 |
| 92014 | Arm Mount Inserts | 4 ea. |

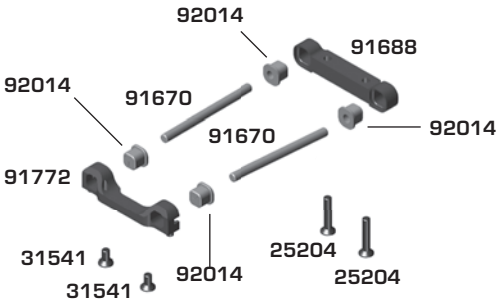


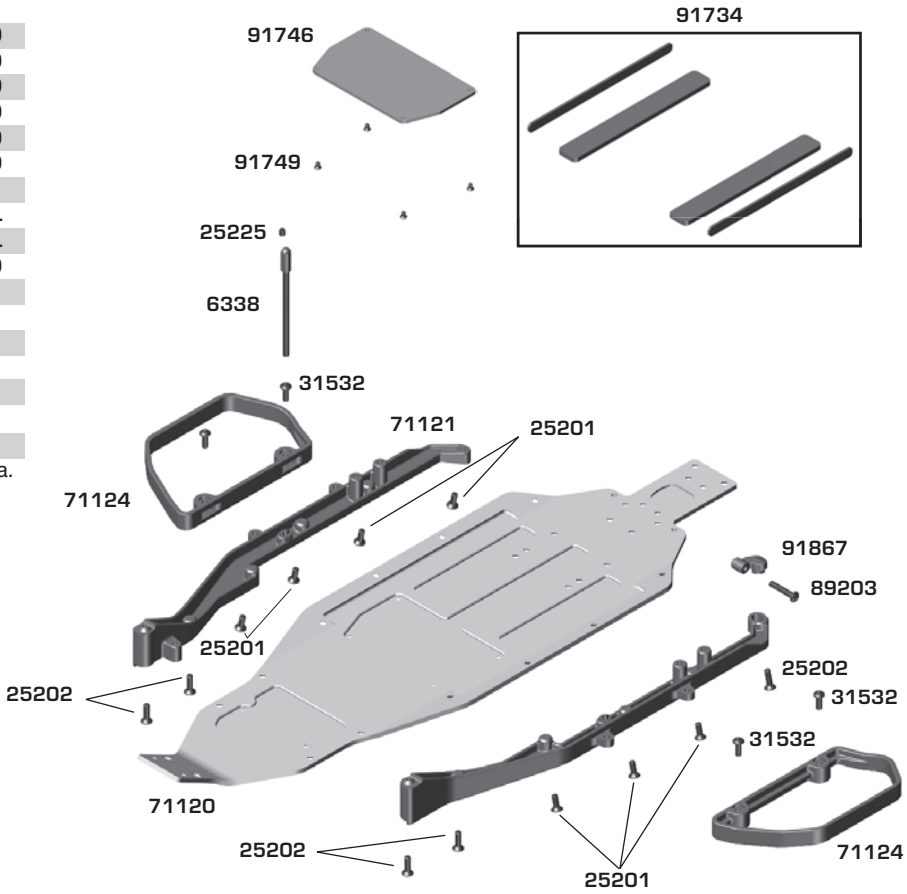

## :: Factory Team and Option Parts

| | | |
|---|---|---|
| 1364 | FT Aluminum Servo Horn, 23T, 15.5mm | 1 |
| 1366 | FT Aluminum Servo Horn, 25T, 15.5mm | 1 |
| 1369 | FT Aluminum Clamping Servo Horn 23T, 15.5mm | 1 |
| 1370 | FT Aluminum Clamping Servo Horn 25T, 15.5mm | 1 |
| 1404 | FT Titanium Turnbuckles, 45mm, Silver | 2 |
| 1405 | FT Titanium Turnbuckles, 48mm, Silver | 2 |
| 1407 | FT Titanium Turnbuckles, 58mm, Silver | 2 |
| 1408 | FT Titanium Turnbuckles, 67mm, Silver | 2 |
| 1413 | FT Titanium Turnbuckles, 38mm, Silver | 2 |
| 6584 | FT Ceramic Diff Balls, 3/32” | 14 |
| 27128 | Servo Washers, Black Aluminum | 4 |
| 31381 | Aluminum Ballstud Washers, 5.5x0.5mm | 10 |
| 31382 | Aluminum Ballstud Washers, 5.5x1.0mm | 10 |
| 31383 | Aluminum Ballstud Washers, 5.5x2.0mm | 10 |
| 31384 | Bulkhead Washers, 7.8x0.5 mm, blue aluminum | 10 |
| 31385 | Bulkhead Washers, 7.8x1.0 mm, blue aluminum | 10 |
| 31386 | Bulkhead Washers, 7.8x2.0 mm, blue aluminum | 10 |
| 71014 | FT Clamping Wheel Hexes, 8.5mm | 2 |
| 71034 | FT Clamping Wheel Hexes, 6.0mm | 2 |
| 91493 | FT Low Friction X-Rings | 4 |
| 91494 | FT 12mm Machined Shock Spacers, V2 | 1 |
| 91495 | FT 12mm V2 X-Ring Rebuild Kit | 1 |
| 91577 | FT 12x27.5mm FOX(R) Shock Bodies with Genuine Kashima Coat, V2, threaded | 2 |
| 91579 | FT 12x36mm FOX(R) Shock Bodies with Genuine Kashima Coat, V2, threaded | 2 |
| 91580 | Titanium Screws, 3x6mm BHCS | 4 |
| 91581 | Titanium Screws, 3x8mm BHCS | 4 |
| 91582 | Titanium Screws, 3x10mm BHCS | 4 |
| 91583 | Titanium Screws, 3x12mm BHCS | 4 |
| 91584 | Titanium Screws, 3x14mm BHCS | 4 |
| 91585 | Titanium Screws, 3x16mm BHCS | 4 |
| 91588 | Titanium Screws, 3x22mm BHCS | 4 |
| 91589 | Titanium Screws, 3x24mm BHCS | 4 |
| 91592 | Titanium Screws, 3x8mm FHCS | 4 |
| 91593 | Titanium Screws, 3x10mm FHCS | 4 |
| 91594 | Titanium Screws, 3x12mm FHCS | 4 |
| 91595 | Titanium Screws, 3x14mm FHCS | 4 |
| 91596 | Titanium Screws, 3x16mm FHCS | 4 |
| 91597 | Titanium Screws, 3x18mm FHCS | 4 |
| 91610 | FT Clamping Wheel Hexes, 7.0mm | 2 |
| 91619 | FT 3 x 27.5mm Shock Shaft (V2), TiN | 2 |
| 91620 | FT 3 x 27.5mm Shock Shaft (V2), Chrome | 2 |
| 91621 | FT 12mm Pistons, V2, 2x1.6, Thin | 4 |
| 91622 | FT 12mm Pistons, V2, 2x1.7, Thin | 4 |
| 91623 | FT 3 x 35mm Shock Shaft (V2), TiN | 2 |
| 91624 | FT 3 x 35mm Shock Shaft (V2), Chrome | 2 |
| 91625 | FT 12mm Pistons V2, 2 x 1.5, flat | 4 |
| 91626 | FT 12mm Pistons (V2), 2x1.6 mm, flat | 4 |
| 91627 | FT 12mm Pistons V2, 2 x 1.7, flat | 4 |
| 91628 | FT 12mm Pistons (V2), 3x1.4 mm, flat | 4 |
| 91630 | FT 12mm Pistons (V2), Blank, flat | 4 |
| 91631 | FT 12mm Pistons (V2), 3x1.4 mm, tapered | 4 |
| 91633 | FT 12mm Pistons (V2), Blank, tapered | 4 |
| 91658 | FT Aluminum Bulkhead, 10g | 1 |
| 91659 | FT Brass Bulkhead, 30g | 1 |
| 91668 | FT Aluminum Steering Bellcranks | 1 |
| 91744 | FT Brass Under Battery Weights | 2 |
| 91745 | FT Aluminum Chassis Weight, 9g | 1 |
| 91746 | FT Aluminum Chassis Weight, 13g | 1 |
| 91747 | FT Steel Chassis Weight, 24g | 1 |
| 91748 | FT Steel Chassis Weight, 36g | 1 |
| 91750 | HD Titanium Ball Stud, 4mm | 2 |
| 91751 | HD Titanium Ball Stud, 6mm | 2 |
| 91752 | HD Titanium Ball Stud, 8mm | 2 |
| 91753 | HD Titanium Ball Stud, 10mm | 2 |
| 91754 | FT ESC Plate, Carbon Fiber | 1 |
| 91761 | FT Servo Plate, Carbon Fiber | 1 |
| 91773 | FT Brass Arm Mount C | 1 |
| 91781 | FT Gear Diff Cover, Aluminum | 1 |
| 91793 | Aluminum Differential Height Inserts, Black | 4 |
| 91796 | FT Laydown/Layback Motor Plate, Carbon Fiber | 1 |
| 91797 | Titanium Top Shaft Screw | 1 |

## :: Factory Team and Option Parts

| | | |
|---|---|---|
| 91800 | FT Direct Drive Kit | 1 |
| 91802 | FT Vented Slipper Hub | 1 |
| 91806 | FT Vented Slipper Hub, Outer | 1 |
| 91807 | FT HTC Vented Slipper Hub, Outer | 1 |
| 92185 | FT Rear Hub Link Shim Set, Carbon Fiber | 1 |
| 92254 | FT Nuts, M4 Low Profile Wheel Nuts, Black | 4 |

## :: Tools

| | | |
|---|---|---|
| 1111 | FT Turnbuckle Wrench | 1 |
| 1112 | FT 4mm Turnbuckle Wrench | 1 |
| 1114 | FT Dual Turnbuckle Wrench | 1 |
| 1452 | FT TC Ride Height Gauge | 1 |
| 1498 | FT Universal Tire Balancer | 1 |
| 1499 | FT Body Reamer | 1 |
| 1500 | FT 1.5mm Hex Driver | 1 |
| 1501 | FT 2.0mm Hex Driver | 1 |
| 1502 | FT 2.0mm Ball Hex Driver | 1 |
| 1503 | FT 2.5mm Hex Driver | 1 |
| 1504 | FT 2.5mm Ball Hex Driver | 1 |
| 1505 | FT 3.0mm Hex Driver | 1 |
| 1506 | FT 5.0mm Hex Driver | 1 |
| 1507 | FT 5.5mm Nut Driver | 1 |
| 1508 | FT 7.0mm Nut Driver | 1 |
| 1510 | FT 1.5mm Hex Replacement Tip | 1 |
| 1511 | FT 2.0mm Hex Replacement Tip | 1 |
| 1512 | FT 2.0mm Ball Replacement Tip | 1 |
| 1513 | FT 2.5mm Hex Replacement Tip | 1 |
| 1514 | FT 2.5mm Ball Replacement Tip | 1 |
| 1515 | FT 3.0mm Hex Replacement Tip | 1 |
| 1518 | FT HEX Driver Tool Set (3pcs) | 1 |
| 1519 | FT Hex/Nut Driver Tool Set (5pc) | 1 |
| 1522 | FT Digital Scale, 100/0.01g | 1 |
| 1555 | FT Clutch Gauge, 4 Shoe | 1 |
| 1568 | FT 5.5mm Short Nut Driver | 1 |
| 1569 | FT 7mm Nut Driver, T-Handle | 1 |
| 1570 | FT 5.5mm Short Nut Driver | 1 |
| 1571 | FT 1:8 Wheel Nut Wrench, 17mm Hex | 1 |
| 1579 | FT Ball Cup Wrench - (will not work on Enduro rod ends) | 1 |
| 1595 | Chassis Weights, 1/4 oz | 1 |
| 1650 | 7 Piece Hex Driver Set | 1 |
| 1657 | FT 1/4” Hex Drive .050” Tip | 1 |
| 1659 | FT 1/4” Hex Drive 5/64” - 2.0mm Tip | 1 |
| 1661 | FT 1/4” Hex Drive 1.5mm Tip | 1 |
| 1662 | FT 1/4” Hex Drive 2.5mm Tip | 1 |
| 1666 | FT 1/4” Hex Drive 5.5mm Nut Driver Tip | 1 |
| 1667 | FT 1/4” Hex Drive 7.0mm Nut Driver Tip | 1 |
| 1668 | FT 1/4” Hex Drive 8.0mm Nut Driver Tip | 1 |
| 1674 | FT 1/4” 5 Piece Power Tool Tips Set (5/64-2.0mm, 1.5mm, 2.5mm, 5/64”- 2.0mm ball, 2.5mm ball) | 1 |
| 1679 | FT T-Handle Ratchet Driver | 1 |
| 1737 | FT Body Scissors | 1 |
| 3719 | 6 Inch Nylon Wire Ties | 12 |
| 3987 | FT Droop Gauge | 1 |
| 89240 | RC8 FT Turnbuckle Wrench | 1 |

## :: Lubes & Adhesives / Misc.

| | | |
|---|---|---|
| 1105 | FT Green Slime Shock Lube | 1 |
| 1596 | FT Locking Adhesive | 1 |
| 1597 | FT Tire Adhesive, medium | 1 |
| 6588 | Black Grease - 4cc | 1 |
| 6591 | S.Diff Lube - 4cc | 1 |
| 6636 | Silicone Grease - 4cc | 1 |
| 6727 | Servo Tape | 2 |
| 727 | Reedy 2020 Sticker Set | 1 |
| 3840 | 2016 Team Associated Decal Sheet | 1 |
| 71133 | SC6.1 FT Chassis Protective Sheet | 1 |

## :: Reedy Competition Motors & Spare Parts

| | | |
|---|---|---|
| 293 | Sonic 540 FT 17.5 Fixed Timing | 1 |
| 294 | Sonic 540 FT 13.5 Fixed Timing | 1 |
| 295 | Sonic 540-FT Spec Rotor 12.0 x 7.25 x 25.3 | 1 |
| 297 | Sonic 540 FT 21.5 Fixed Timing | 1 |
| 27400 | S-Plus 25.5 Spec | 1 |
| 27401 | S-Plus 21.5 Spec | 1 |
| 27402 | S-Plus 17.5 Spec | 1 |
| 27403 | S-Plus 13.5 Spec | 1 |
| 27404 | S-Plus 10.5 Spec - Torque | 1 |
| 27414 | 540-M3/S-Plus Spec Rotor 12.5 x 7.15 x 24.2 | 1 |
| 27415 | 540-M3/S-Plus Spec Rotor 12.3 x 7.15 x 24.2 | 1 |
| 27417 | S-Plus Screw Set | 1 |
| 27418 | 540-M3/S-Plus Lightweight Sensor Board | 1 |
| 27419 | S-Plus Front Plate | 1 |
| 27420 | 540-M3/S-Plus Aluminum Case Screw Set | 1 |
| 27421 | 540-M3/S-Plus Aluminum Timing Screw Set | 1 |
| 27428 | S-Plus 21.5 Spec - Torque | 1 |
| 27429 | S-Plus 17.5 Spec - Torque | 1 |
| 27436 | Sonic 540-M4 Modified Motor 17.5 | 1 |
| 27437 | Sonic 540-M4 Modified Motor 13.5 | 1 |
| 27438 | Sonic 540-M4 Modified Motor 9.5 | 1 |
| 27439 | Sonic 540-M4 Modified Motor 8.5 | 1 |
| 27440 | Sonic 540-M4 Modified Motor 8.0 | 1 |
| 27441 | Sonic 540-M4 Modified Motor 7.5 | 1 |
| 27442 | Sonic 540-M4 Modified Motor 7.0 | 1 |
| 27443 | Sonic 540-M4 Modified Motor 6.5 1/12 | 1 |
| 27444 | Sonic 540-M4 Modified Motor 6.5 | 1 |
| 27445 | Sonic 540-M4 Modified Motor 6.0 | 1 |
| 27446 | Sonic 540-M4 Modified Motor 5.5 | 1 |
| 27447 | 540-M4 Mod Rotor 12.5 x 7.25 x 25.3 | 1 |
| 27448 | 540-M4 Mod Rotor 12.5 x 5.0 x 25.3 | 1 |
| 27449 | 540-M4 Mod Rotor 13.0 x 5.0 x 25.3 | 1 |
| 27450 | 540-M4 Mod Rotor 12.0 x 5.0 x 25.3 | 1 |
| 27451 | Sonic 540-M4 Modified Motor 5.0 | 1 |
| 27452 | Sonic 540-M4 Modified Motor 4.5 | 1 |
| 27453 | Sonic 540-M4 Modified Motor 4.0 | 1 |
| 27454 | Sonic 540-M4 Modified Motor 3.5 | 1 |
| 27455 | 540-M4 Sensor Board | 1 |
| 27456 | 540-M4 Ball Bearing Set | 1 |
| 27460 | 540-M4 Mod Rotor 12.3 x 5.0 x 25.3 | 1 |

## :: Reedy Competition Motor Accessories

| | | |
|---|---|---|
| 978 | Flat Sensor Wire 70mm | 1 |
| 979 | Flat Sensor Wire 110mm | 1 |
| 980 | Flat Sensor Wire 150mm | 1 |
| 981 | Flat Sensor Wire 200mm | 1 |
| 982 | Flat Sensor Wire 270mm | 1 |
| 994 | Flat Sensor Wire 125mm | 1 |
| 995 | Flat Sensor Wire 175mm | 1 |
| 27423 | 30mm Motor Fan w/195mm extension | 1 |
| 27457 | 30mm Aluminum Motor Fan w/195mm extension | 1 |
| 27458 | 40mm Aluminum Motor Fan w/195mm extension | 1 |

## :: Reedy ESC's

| | | |
|---|---|---|
| 27002 | Blackbox 800Z 2S Zero-Timing Competition ESC | 1 |
| 27004 | Blackbox 510R Competition ESC | 1 |
| 27005 | Blackbox 510R Competition ESC w/PROgrammer2 | 1 |
| 27006 | Blackbox 600Z 2S Zero-Timing Competition ESC | 1 |
| 27024 | Blackbox Pro Capacitor Unit | 1 |
| 27027 | Blackbox PROgrammer2 | 1 |
| 27028 | Blackbox 30x30x7mm Fan w/screws | 1 |
| 27029 | Blackbox Pro Modified Capacitor Unit | 1 |
| 27030 | Blackbox ESC/Programmer2 Connection Wire | 1 |
| 27031 | Blackbox 510R 30x30x10mm Fan w/screws | 1 |
| 27033 | Blackbox 1000Z+ Pro Competition ESC | 1 |

## :: Reedy Chargers

| | | |
|---|---|---|
| 27201 | 324-S AC LiPo/LiFe Compact Balance Charger | 1 |
| 27202 | 123-S AC LiPo Compact Balance Charger | 1 |
| 27203 | 1416-C2L Dual AC/DC Competition Battery Charger | 1 |

## :: Reedy Batteries

| | | |
|---|---|---|
| 302 | AA Alkaline 1.5V (4) | 1 |
| 27313 | LiPo Pro TX/RX 2400mAh 7.4V Flat | 1 |
| 27315 | LiFe Pro TX/RX 1600mAh 6.6V Flat | 1 |
| 27318 | Wolfpack HV LiPo 50C 4200mAh 7.6V Shorty | 1 |
| 27347 | Zappers SG3 6100mAh 85C 7.6V Shorty | 1 |
| 27348 | Zappers SG3 4800mAh 115C 7.6V Shorty | 1 |
| 27349 | Zappers SG3 4100mAh 85C 7.6V LP Shorty | 1 |
| 27350 | Zappers SG3 3600mAh 115C 7.6V LP Shorty | 1 |

## :: Reedy Charger Accessories

| | | |
|---|---|---|
| 27220 | Reedy 7-in-1 Universal Charge Lead (4mm) | 1 |
| 27221 | Reedy T-plug Charge Lead (4mm) | 1 |
| 27222 | Reedy XH 2-6S Balance Board (4mm) | 1 |
| 27223 | Reedy RX Charger Lead FUT (4mm) | 1 |
| 27224 | Reedy US to IEC 320 C5 angle 1M AC Power Cord | 1 |
| 27226 | Reedy EU to IEC 320 C5 angle 1M AC Power Cord | 1 |
| 27233 | Reedy 1-2S 4mm/5mm Pro Charge Lead | 1 |
| 27234 | Reedy 4S 5mm Pro Clarge Lead | 1 |
| 27235 | Reedy 2S RX/TX Pro Charge Lead | 1 |
| 27236 | Reedy 2S-4S T-plug Pro Charge Lead | 1 |
| 27237 | Reedy 2S-4S XT60 Pro Charge Lead | 1 |

## :: Reedy Servos & Accessories

| | | |
|---|---|---|
| 27100 | RS1206 Digital HV Hi-Speed Competition Servo | 1 |
| 27101 | RT1508 Digital HV Hi-Torque Competition Servo | 1 |
| 27102 | RS1206 Case Set w/screws | 1 |
| 27103 | RS1206 Gear Set | 1 |
| 27104 | RT1508 Case Set w/screws | 1 |
| 27105 | RT1508 Gear Set | 1 |
| 27107 | RT2207A Digital HV Aluminum Hi-Torque Competition Servo | 1 |
| 27109 | RT1408 Digital HV Low-Profile Hi-Torque Competition Servo | 1 |
| 27117 | RT3507A Digital HV Aluminum Brushless Servo | 1 |
| 27118 | RS3005A Digital HV Aluminum Brushless Servo | 1 |
| 27119 | RT1705A Digital HV Aluminum Brushless LP Servo | 1 |
| 27121 | RT2207A Gear Set | 1 |
| 27122 | Reedy Aluminum Servo Horn (25) | 1 |
| 27123 | Reedy Aluminum Clamping Servo Horn (25) | 1 |
| 27126 | RT1408 Case Set w/screws | 1 |
| 27128 | RT1408 Gear Set | 1 |
| 27146 | RT3507A Gear Set | 1 |
| 27147 | RS3005A Gear Set | 1 |
| 27148 | RT1705A Gear Set | 1 |

## :: Reedy Accessories

| | | |
|---|---|---|
| 643 | Low Profile Bullet  Plug 4mm x 14mm (2) | 1 |
| 644 | Low Profile Bullet Plug 4mm x 14mm (10) | 1 |
| 645 | Low Profile Bullet Plug 5mm x 14mm (2) | 1 |
| 646 | Low Profile Bullet Plug 5mm x 14mm (10) | 1 |
| 647 | Silicone Wire 12AWG-Black (1m) | 1 |
| 648 | Silicone Wire 14AWG-Black (1m) | 1 |
| 650 | Shrink Tubing - 15pcs 4.5mm x 20mm | 1 |
| 747 | Silicone Wire 12AWG-Black (30m) | 1 |
| 790 | Silicone Wire 13AWG-Black (1m) | 1 |
| 791 | Silicone Wire 13AWG-Black (30m) | 1 |
| 792 | Low Profile Caged Bullet Plug 4mm x 14mm (2) | 1 |
| 794 | Low Profile Caged Bullet Plug 5mm x 14mm (2) | 1 |
| 27304 | LiPo Battery Weight Set - Shorty | 1 |
| 27355 | Shorty Battery Weight Set - 20g, 34g, 50g | 1 |

RC10 SC6.2 TEAM KIT

Driver: SC6.2 Kit Setup | Event: | Date: | Track: | Qualify: | TQ: ☐ | Main: | Finish: | Best Lap Time:

## Front Suspension:

| | |
|---|---|
| Ride Height: | 27 |
| Camber: | -1 |
| Toe: | 0 |
| Anti-Roll Bar: | 1.3mm |
| Arm Type: | Kit #71103 |
| Tower Type: | Kit #71115 |
| Wheel Hex: | 8.5mm |
| Steering Block: | 4mm |
| Caster Block Insert: | +5 |
| Bulkhead Type: | Plastic |
| Kick-Up Angle: | 25 |
| Notes: | |

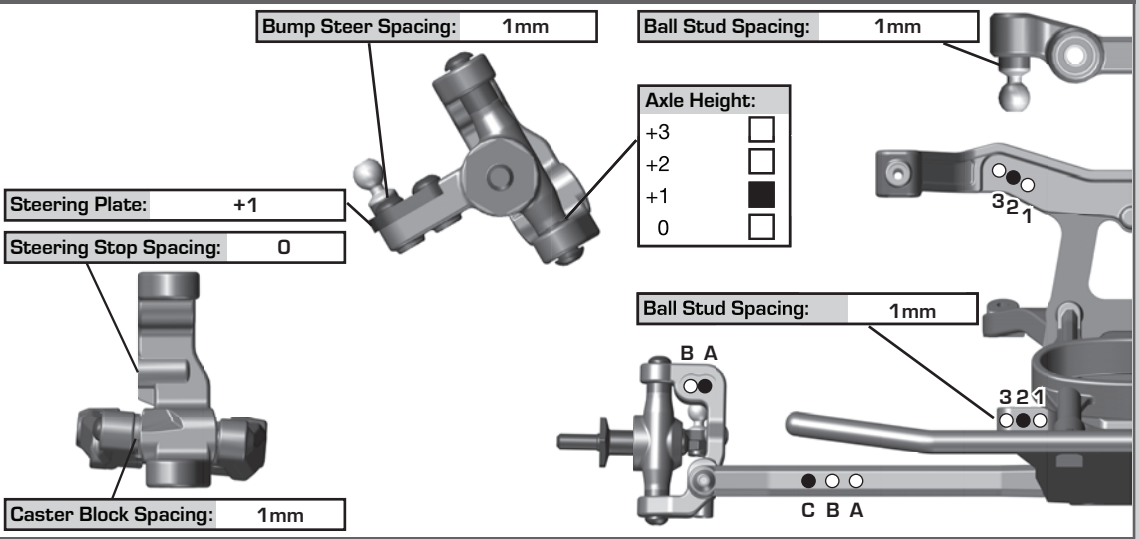


## Rear Suspension:

| | |
|---|---|
| Ride Height: | 26 |
| Camber: | -1 |
| Anti-Roll Bar: | |
| Arm Type: | Kit #71105 |
| Tower Type: | Kit #71148 |
| Wheel Hex: | 8.5mm |
| Shock Mounting Position: | Front of Arm ☐ Rear of Arm ■ |
| Hub Spacing: | Fwd ☐ Mid ■ Back ☐ |
| Notes: | |

C Mount: Aluminum ■ Brass ☐

D Mount: Aluminum ■ Brass ☐

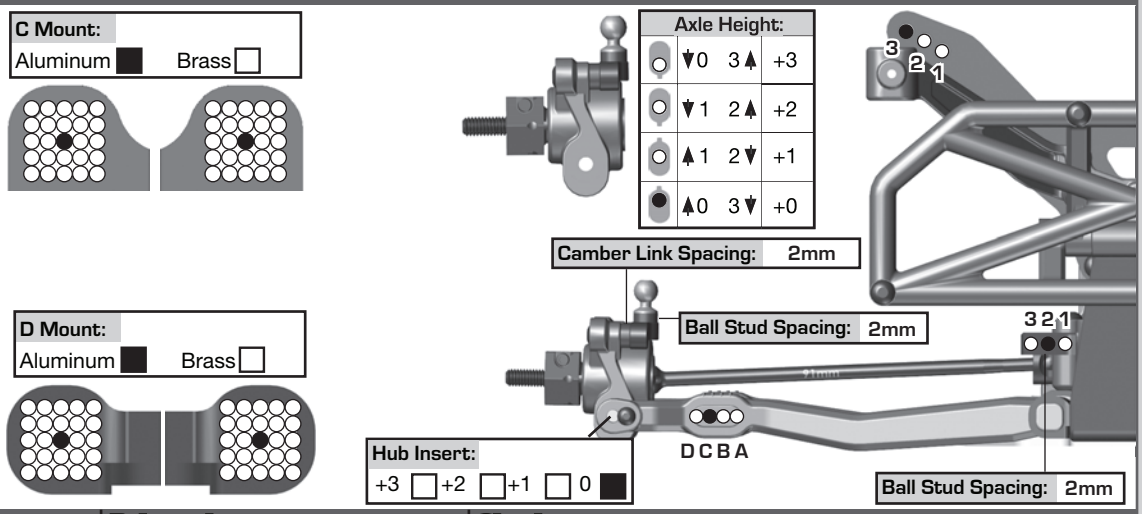


## Electronics:

| | |
|---|---|
| Radio: | |
| Servo: | |
| EPA: | Throttle: % Brake: % |
| ESC: | |
| ESC Settings: | |
| Motor: | |
| Wind: | |
| Timing: | |
| Pinion: | |
| Spur: | 81 |
| Battery: | |
| Batt. Position: | BACK 1 ☐ 2 ■ 3 ☐ 4 ☐ 5 ☐ FWD |

## Drivetrain:

| | |
|---|---|
| Transmission: | Laydown: ☐ Layback: ■ Stand Up: ☐ |
| Differential: | Ball Diff: ■ |
| Height: 0 | Gear Diff: ☐ |
| Notes: | |

## Slipper Clutch:

| | |
|---|---|
| Setting: | Kit |
| Pad Type: | 2 Pads ■ 3 Pads ☐ |

## Shocks:

| | Front | Rear |
|---|---|---|
| Piston: | 2 x 1.6 | 2 x 1.7 |
| Fluid: | 30wt | 30wt |
| Spring: | Gray 54mm | White 72mm |
| Limiters: | 2 Internal | 1 Internal |
| Stroke: | 26.5mm | 35mm |
| Eyelet Length: | Long | Long |
| Cup Offset: | 5mm | 5mm |
| Notes: | | |

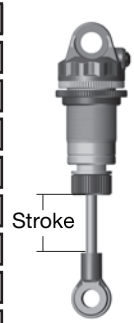


## Track Info:

| | | | | |
|---|---|---|---|---|
| Size: | Small ☐ | Medium ☐ | Large ☐ | Extra Large ☐ |
| Surface: | Dirt ☐ | Carpet ☐ | Astroturf ☐ | Multi Surface ☐ |
| Traction: | Low ☐ | Medium ☐ | High ☐ | Very High ☐ |
| Moisture: | Dry ☐ | Damp ☐ | Wet ☐ | |
| Condition: | Indoor ☐ | Outdoor ☐ | Dusty ☐ | Hard Packed ☐ |
| | Bumpy ☐ | Grooved ☐ | Smooth ☐ | Loamy ☐ |
| Temperature: | Ambient: | Track: | | |
| Notes: | | | | |

## Tires:

| | |
|---|---|
| Front Tires: | |
| Front Compound: | |
| Front Insert: | |
| Rear Tires: | |
| Rear Compound: | |
| Rear Insert: | |
| Wheel (F/R): | |
| Notes: | |

## Body, Weight:

| | |
|---|---|
| Body: | |
| Body Height: | |
| Servo Weights: | None ■ Aluminum ☐ Steel ☐ Other ☐ |
| Electronic Weights: | None ☐ Aluminum ■ Steel ☐ Other ☐ |
| Total Vehicle Weight: | |

## Vehicle Comments:

Notes:

RC10 SC6.2 TEAM KIT

Driver: _____ Event: _____
Date: _____ Track: _____
Qualify: _____ TQ: ☐ Main: _____ Finish: _____ Best Lap Time: _____

## Front Suspension:

Ride Height:
Camber:
Toe:
Anti-Roll Bar:
Arm Type:
Wheelbase Shim:
Wheel Hex:
Steering Block:
Caster Block Insert:
Bulkhead Type:
Kick-Up Angle:
Notes:

Bump Steer Spacing:
Steering Plate:
Steering Stop Spacing:
Caster Block Spacing:

Ball Stud Spacing:
Axle Height:
+3 ☐
+2 ☐
+1 ☐
0 ☐

3 2 1

Ball Stud Spacing:

B A

3 2 1

C B A

## Rear Suspension:

Ride Height:
Camber:
Anti-Roll Bar:
Arm Type:
Tower Type:
Rear Hub Shim:
Wheel Hex:
Shock Mounting Position:
Front of Arm ☐ Rear of Arm ☐
Hub Spacing: Fwd ☐ Mid ☐ Back ☐
Notes:

C Mount:
Aluminum ☐ Brass ☐

D Mount:
Aluminum ☐ Brass ☐

Axle Height:

| | | | |
|---|---|---|---|
| | ↓0 | 3↑ | +3 |
| | ↓1 | 2↑ | +2 |
| | ↑1 | 2↓ | +1 |
| | ↑0 | 3↓ | +0 |

3 2 1

Camber Link Spacing:
Ball Stud Spacing:
3 2 1
D C B A
Hub Insert:
+3 ☐ +2 ☐ +1 ☐ 0 ☐
Ball Stud Spacing:

## Electronics:

Radio: Servo:
EPA: Throttle: % Brake: %
ESC:
ESC Settings:
Motor:
Wind: Timing:
Pinion: Spur:
Battery:
Batt. Position: BACK 1 ☐ 2 ☐ 3 ☐ 4 ☐ 5 ☐ FWD

## Drivetrain:

Transmission: Laydown: ☐ Layback: ☐ Stand Up: ☐
Differential: Ball Diff: ☐
Height: _____ Gear Diff: ☐
Notes:

## Slipper Clutch:

Setting:
Pad Type: 2 Pads ☐ 3 Pads ☐

## Shocks:

| | Front | Rear |
|---|---|---|
| Piston: | | |
| Fluid: | | |
| Spring: | | |
| Limiters: | | |
| Stroke: | | |
| Eyelet Length: | | |
| Cup Offset: | | |
| Notes: | | |

Stroke

## Track Info:

Size: Small ☐ Medium ☐ Large ☐ Extra Large ☐
Surface: Dirt ☐ Carpet ☐ Astroturf ☐ Multi Surface ☐
Traction: Low ☐ Medium ☐ High ☐ Very High ☐
Moisture: Dry ☐ Damp ☐ Wet ☐
Condition: Indoor ☐ Outdoor ☐ Dusty ☐ Hard Packed ☐
Bumpy ☐ Grooved ☐ Smooth ☐ Loamy ☐
Temperature: Ambient: Track:
Notes:

## Tires:

Front Tires:
Front Compound:
Front Insert:
Rear Tires:
Rear Compound:
Rear Insert:
Wheel (F/R):
Notes:

## Body, Weight:

Body:
Body Height:
Servo Weights:
None ☐ Aluminum ☐ Steel ☐ Other ☐
Electronic Weights:
None ☐ Aluminum ☐ Steel ☐ Other ☐
Total Vehicle Weight:

## Vehicle Comments:

Notes:

:: For more setups, visit RC10.com and click on "Setup Sheets"

ASSOCIATED ELECTRICS

Since 1965

21062 Bake Parkway Lake Forest, CA 92630 USA

call: (949) 544-7500 - fax: (949) 544-7501

visit us at: **www.AssociatedElectrics.com**
for all of our current products, new releases, setup help, tips, and racing info!

**FOLLOW US ON SOCIAL MEDIA**

**TeamAssociated**
**ReedyPower**
**ElementRC**

**@TeamAssociatedRC**
**@ReedyPower**
**@Element RC**

**@Team_Associated**
**@ReedyPower**

**AEFactoryTeam**